Water Resources Center
Annual Technical Report
FY 2017

Introduction

The Minnesota WRRA program is administered by the University of Minnesota Water Resources Center (WRC), which is jointly supported by two colleges: the College of Food, Agricultural, and Natural Resource Sciences (CFANS) and University of Minnesota Extension. The WRC employs 14 staff members as of January 2018. The leadership of the center includes a director, Jeff Peterson, and an associate director, Joel Larson (beginning Jan. 29, 2018). Peterson reports on behalf of the center to the Dean of CFANS and the Dean of Extension. Additional administrative staff include an administrative director, a finance professional, and a communications specialist. WRRA Section 104(b) funds support portions of administrative staff salaries. The majority of the staff in the WRC work on research, Extension/outreach, and education programs sponsored by grants and program revenue. WRC staff scientists are involved in research/outreach projects supported by various sponsors, focusing on agriculture and rural watersheds, urban stormwater, and small-scale wastewater. The WRC is the administrative home of the interdisciplinary Water Resource Sciences graduate program, with a graduate faculty of over 100 members spanning over 20 departments on the Twin Cities and Duluth campuses. Another major activity area is the WRC's professional training and certification, including the Onsite Sewage Treatment Program, the Wetland Delineator Certification Program, and the Watershed Specialist Training Program. The center also sponsors a number of conferences and events, the largest and most visible of which is the annual Minnesota Water Resources Conference held each October. Additional information transfer activities include two newsletters: Minnegram, sent quarterly to a statewide audience, and Confluence, sent weekly to the campus water community.

Research Program Introduction

In October 2016, the WRC released a Request for Proposals for its fiscal 2017 grant competition supported by WRRA 104b funds. The WRC received 12 proposals by the November 21 deadline. We then requested 6 external reviews for each proposal, seeking reviewers who were experts on the proposed topics from both within and outside Minnesota. As in past years, an Advisory Committee was convened to advise the WRC on funding decisions. Each committee member was provided copies of the proposal and external reviews. The committee met in December 2015 and selected three proposals to be recommended for funding. Each project was featured in our quarterly newsletter, the Minnegram.

Investigation of a novel approach to mitigate nitrogen and phosphorus from tile drainage

Basic Information

Title:	Investigation of a novel approach to mitigate nitrogen and phosphorus from tile drainage
Project Number:	2017MN377B
Start Date:	3/1/2017
End Date:	2/28/2018
Funding Source:	104B
Congressional District:	7
Research Category:	Water Quality
Focus Categories:	Water Quality, Nutrients, Agriculture
Descriptors:	None
Principal Investigators:	Jeffrey Strock

Publications

1. Strock, J., A. Ranaivoson, G. Feyereisen, K. Spokas, D. Mulla, and M. Roser. 2017. Novel design and field performance of phosphorus-sorbing and denitrifying bioreactors. p. 24-34. In J. Strock and A. Ranaivoson (eds.). Proceedings of 6th Soil and Water Management Field Day, 18 July, 2017. Univ. Minnesota, Southwest Research and Outreach Center, Lamberton, MN.
2. A.Z. Ranaivoson and J.S. Strock. Minnesota Department of Agriculture Brown bag lunch presentation. 11 October, 2017.Title: Modular Bioreactors for mitigating nutrients from subsurface drainage.
3. A.Z. Ranaivoson and J.S. Strock. American Society of Farm Managers and Rural Appraisers (AFSRMA). 20 September, 2017. Lamberton, MN. Presenter. Title. Modular Bioreactors for treating tile drainage to remove nitrogen and phosphorus.
4. A.Z. Ranaivoson and J.S. Strock. Soil Science Society of America Annual Meeting. 23 October, 2017. Tampa, FL. Title: Novel Design and Field Performance of Phosphorus-Sorbing and Denitrifying Bioreactors.

Research

Investigation of a novel approach to mitigate nitrogen and phosphorus from tile drainage

Jeffrey S. Strock and Andry Z. Ranaivoson

Introduction

Contemporary end-of-tile bioreactors consist of a water level control structure used to route water into the bioreactor. The typical bioreactor consists of a narrow (<1 m wide) trench, 1 to 1.5 m deep and 10's of meters long. Bioreactors may be lined to prevent seepage or unlined. The bioreactors are then filled with sources of carbon which may include saw dust, wood chips or corn cobs. These bioreactors are solely designed to reduce NO_3^- loading to surface water by denitrification.

We designed a novel bioreactor capable of removing both N and P and also which would be accessible to easy maintenance. The prototype design consists of a reinforced tank, porous lava rock, a sheet of Brotex, a honeycomb shaped geotextile cellular containment material. These layers encompass the hydraulic filtering media and the denitrification media. Three materials were selected for the P removal media including sieved steel slag, sieved crushed recycled concrete or limestone. The concept for the bioreactor system is a modular system that can be installed in the field for drainage water treatment, removed when necessary for maintenance and replaced. Once removed from the field the N and P materials could be recycled. The system is designed for installation adjacent to individual tile outlets along a drainage ditch in order to remediate dissolved nitrogen and phosphorus. The number of modules installed at a particular location would be in part determined by the size of the outlet pipe and the desired treatment efficiency (hydraulic residence time and/or nutrient reduction).

Study Location

The field location chosen for experimentation was at the Southwest Research and Outreach Center, near Lamberton, MN. The site was chosen because of the availability of infrastructure, labor and resources to conduct this research.

The SWROC is located in the Cottonwood River watershed of the Minnesota River Basin, in southwest Minnesota (Figure 1.1). The site is located on a lower elevation of glacial till lowland plains. The climate is interior continental with cold winters and moderately hot summers with occasional cool periods. Total annual precipitation of 670 mm is adequate for row crop production, because 74% of this falls during the growing season from April to September. Subsurface drainage from approximately 125 ha, discharges into a channel adjacent to the bioreactors. Subsurface drainage discharge is seasonal, with higher flows from April through June when spring snowmelt combines with spring rainfall. The contributing watershed area comprises 74% cropland (row crops), 20% pasture, and 6% farmstead. The soils of the watershed are of the Canisteo−Ves association. Canisteo soils are poorly drained and are found on the broad lowland glacial till plain. The Canisteo soils and other poorly drained soils in this association require artificial drainage to make them suitable for crop production. Ves soils are well drained and occupy convex knolls above the lowland till plain. Erosion is a concern in management of this soil. These soils are used mainly for row−crop production.

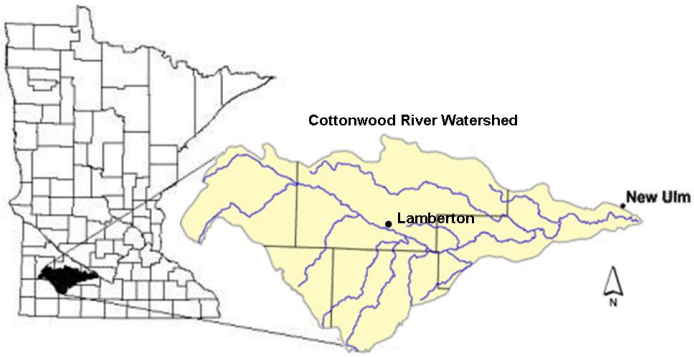

Figure 1.1. Location of the project site at the University of Minnesota Southwest Research and Outreach Center near Lamberton, MN.

Research design

A controlled field experiment consisted of three replications of three experimental treatments. Nine modular bioreactor systems or "cubes" were planned and materials previously described were purchased for construction. The cubes were built on site and installed adjacent to a tile drain outlet along a drainage ditch/waterway. A water distribution system was constructed at the field site in order to divert water from the tile drain outlet to each of the nine cubes. Instrumenting the site was completed with the installation of the monitoring equipment (tipping buckets, data loggers, etc.) (Figure 1.2).

Figure 1.2. From the left: three-way subsurface drain flow splitter to distribute water from the subsurface drain outlet to the bioreactors; block of three bioreactors with a set of three solar panels, one paddle wheel, and a datalogger in the white enclosure; portable samplers for collecting bioreactor discharge for water quality component analysis.

Flow measuring devices and water sampling equipment were installed at the experimental site in order to characterize flow rate and volume and to obtain water samples for chemical characterization. Subsurface drainage was measured in a flow control structure using a pressure transducer connected to a datalogger. The flow control structure was also used to divert water to the modular bioreactors. The outlet elevation of the flow control structure was managed at the highest level possible which created a column of water on the upstream side of the flow control structure.

The outlet of the bioreactor consisted of an adjustable standpipe which was used to raise or lower the elevation of water in the bioreactor. The stand pipe was also used to divert bioreactor effluent to a flow gauge and to collect water samples for chemical characterization. A tipping bucket flow gauge with approximately 4 L capacity per tip was used to measure bioreactor discharge volume and rate. Tipping buckets were made from stainless steel. The volume of each tip was calibrated in the laboratory at a series of known flow rates, ranging from 1.2 to 18.9 liters per minute. The calibration process involved applying water to the tipping bucket at a known flow rate for a period of at least 105 tips. During this period, a datalogger was used to record the time when the calibration started and stopped as well as the exact time for each tip. Tips were counted using magnetic switches located on the tipping bucket. Each modular bioreactor had its own dedicated tipping bucket. Fixed-time interval samples were collected with automatic water samplers (ISCO, Lincoln, NE).

Carbon source augmentation

Denitrification is mainly accomplished by heterotrophic bacteria and is strongly dependent on the availability of organic carbon, which serves as an energy source and electron donor of the denitrification process. Wood products have been commonly used as a carbon source in bioreactors used to treat agriculturally derived nitrate because of its availability, low cost, supports high hydraulic conductivity and relatively high C:N ratio (100-300:1). One of the advantages of a relatively high C:N ratio is that materials like wood are stable and do not require frequent replenishment unlike relatively low C:N ratio, labile carbon sources such as corn cobs which may be depleted more rapidly. One disadvantage of having a relatively high C:N ratio is that the availability of labile carbon could limit denitrification. Nitrate reduction only requires mildly reducing conditions (E_h^o, -82 to -119 mV), so it is important in maintaining redox potential in the optimum range in order to eliminate electron donor scavenging for use in supporting Mn(IV), Fe(III) or sulfate reduction.

In biological treatment processes, which promote denitrification, an external carbon source is frequently added as an electron donor in order to stimulate the process of denitrification. In this project, potassium acetate (CH_3CO_2K) was used as the external carbon source. The concentration was based on reducing nitrate concentration at 20mg/L for a subsurface drain flow rate of 9.0 gpm in the 2”-PVC water mainline; the target stochiometric ratio of C/N was 0.84 as reported by Lew et al. (2012). The target flow rate of subsurface drainage water delivered to each bioreactor was 4 L per minute (1 gpm). Injection rates of acetate varied over the course of the experiment as shown in Table 1.1.

Data collection periods

Data collection began on March 27, 2017. Water samples were collected, preserved and refrigerated at 4° C for analysis of nitrate and total phosphorus by flow injection analysis. Oxidation-reduction potential and dissolved oxygen levels, as indicators of reducing conditions within the bioreactors, were collected through the standpipe of each bioreactor.

One of the original goals of this project was to evaluate the performance of the bioreactors under contrasting temperature conditions (i.e. cool versus warm). It was expected that relatively cold water and air temperatures during the early part of the season, between March and May, may reduce the rate of denitrification in the bioreactors and thus affect the efficiency of nitrate removal from the subsurface drainage water. In contrast, it was expected that relatively warm conditions during the middle to late part of the growing season would have little to no effect on denitrification.

Statistical analysis

In 2017, another type of statistical test was introduced as some of the data were highly non-normal (Shapiro-Wilk test p-values: 4.08 x 10^-6 - 5.99 x 10^-3): Games-Howell post-hoc test handles non-normal, heteroskedastic (unequal variance), and unbalanced data. Two sets of data out of six were analyzed with ANOVA method, daily flow rate and phosphorus concentration data, as they were normal distributed (Shapiro-Wilk test p-values: 0.20 and 0.31).

Results and Discussion

Precipitation

Annual precipitation for 2017 was 765 mm, which was 13% above the 30-year normal average, with low amounts during the first three months of the year. Spring rainfall for 2017 was similar to the pattern of 2016 with the rainfall amount in May almost double that of April (Figure 1.3). Summer, July through September, rainfall was lower than that in 2016. Growing season rainfall was 578 mm in 2017 (April to September), 25% higher than that of the long-term average at 435 mm.

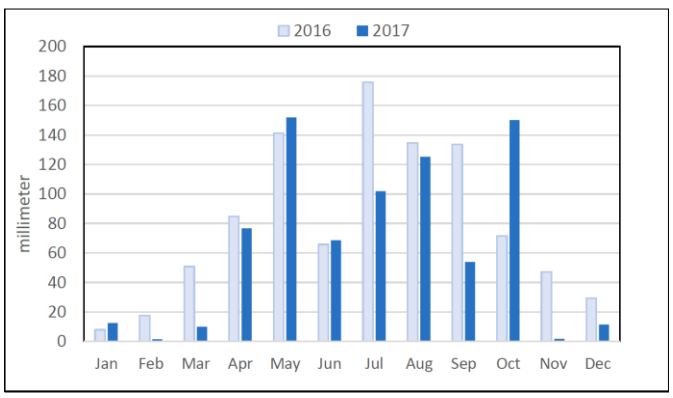

Figure 1.3. Monthly precipitation for 2016 and 2017

Drainage: Cumulative Discharge Volume, Mean Discharge Flow Rate, and Hydraulic Residence Time

Subsurface drainage started in late March 2017. Cube discharge volume was statistically analyzed on a monthly basis whereas mean cube discharge rate was analyzed on a daily basis. During 2017, acetate was injected uniformly throughout the season, consequently, water quantity and quality results are presented as monthly values. Cube outflow was categorized based on P treatment (Table 1.1). The data show that monthly discharge volumes gradually increased beginning in March, peaked in May, and then gradually decreased by the third week of July at which flow ceased for all P treatments. There were small differences in discharge volume between P treatments and months but none of them were significant.

Table 1.1. Monthly discharge volume (m^3), in chronological order for 2017, from bioreactors grouped by P-treatment

P-treatment	March-17	April-17	May-17	June-17	July-17
crushed concrete (n=3)	15.5	93.8	107	81.4	24.1
Limestone (n=3)	12.5	96.3	131	98.3	30.0
steel slag (n=3)	15.7	91.6	119	81.2	35.3

Observed hydraulic residence times (HRT) in 2017 were inversely related to mean daily discharge rate with the month of May HRT having the shortest and the month of July having the longest HRTs values (Table 1.2). The mean HRT was 3.4 hours in 2017. Statistical test for HRT did not yield any significant differences across the P-treatments (p-value: 0.128); post-hoc Games-Howell method was used for the test since the data was strongly non-normal, unbalanced, and heteroskedastic (unequal variance).

Table 1.2. Hydraulic residence time (hour), in chronological order for 2017, for bioreactors grouped by P-treatment.

P-treatment	March-17	April-17	May-17	June-17	July-17
crushed concrete, n=3	2.39	2.59	2.34	3.08	8.59
limestone, n=3	2.90	2.45	1.87	2.48	5.28
steel slag, n=3	3.27	2.71	1.91	2.84	6.29

A classification of hydraulic residence time was produced in Table 1.3. Based on the current configuration of HRT and supplemental carbon addition, an HRT of less than 3 hours may generate very little nitrate load reduction. Under the conditions of 2017, the best HRT category was greater than 4 hours.

Table 1.3. Class of hydraulic residence time, nitrate load reduction average, and nitrate load reduction range per category of hydraulic residence time from all P-treatment cubes in 2017.

HRT, hour	Nitrate Load Reduction Average	Range of Nitrate Load Reduction
< 2.0	8%	0% - 19%
< 3.0	13%	0% - 25%
<4.0	19%	9% - 24%
>4.0	27%	13% - 36%

<u>Oxidation-Reduction and pH Values</u>

The redox potential among the cubes was relatively steady and above the range that would be expected to show strong reducing conditions between the end of March and the first few days of June. The

pattern changed during the second week of June 2017. The month of June coincided with evidence of large nitrate load reduction in 2017. In July, redox values stayed below 150 mV and, at the same time, the HRT values were higher compared to those of previous months. The combination of low redox values and long HRT values resulted in the highest nitrate load reduction for July 2017. Values of pH remained stable over the entire period, March to July, staying between 7.0 and 8.0 (Figure 1.4).

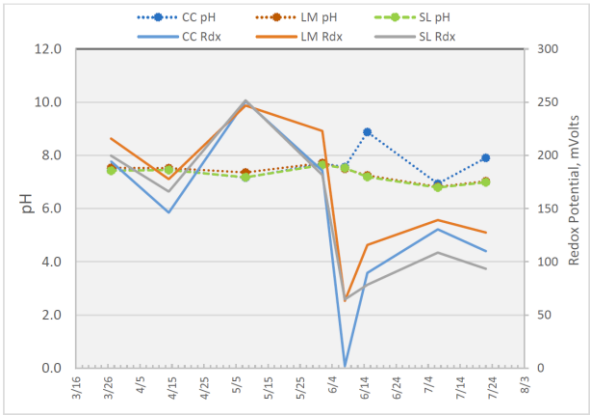

Figure 1.4. Oxidation-reduction potential and pH of bioreactors during 2017

<u>Air and Water Temperature</u>

In general, both air and water temperatures tracked each other closely according to natural daily fluctuations of air temperature. There was an increasing pattern of water temperature when considering the successive average monthly values of water temperature: April 8.5 ^{o}C, May 14.7 ^{o}C, June 22.2 ^{o}C, and July 24.9 ^{o}C (Figure 1.5). The largest jump in temperature was that from May to June (+7.6 ^{o}C).

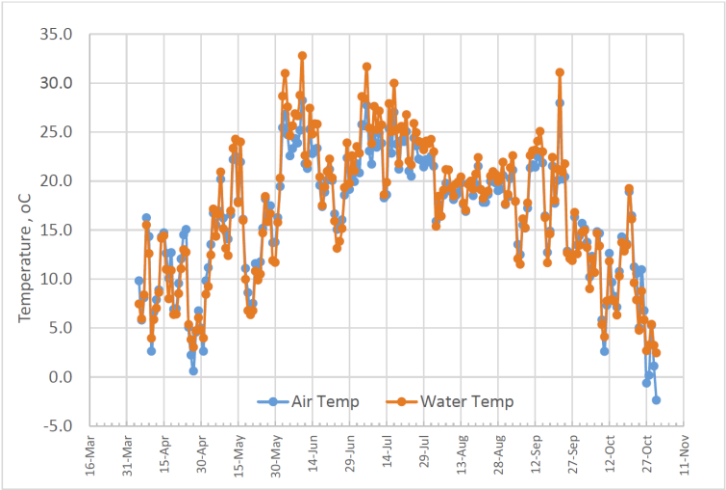

Figure 1.5. Air and bioreactor water temperature from April until October 2017.

Figure 1.6 points out the effects of water temperature and redox potential change in the cubes with respect to nitrate load reduction. An increase in water temperature of 7 ^{o}C generated a sharp drop in redox potential in early June. The net effect was a jump in nitrate load reduction, from less than 4% in May to 16% in June and 40% in July.

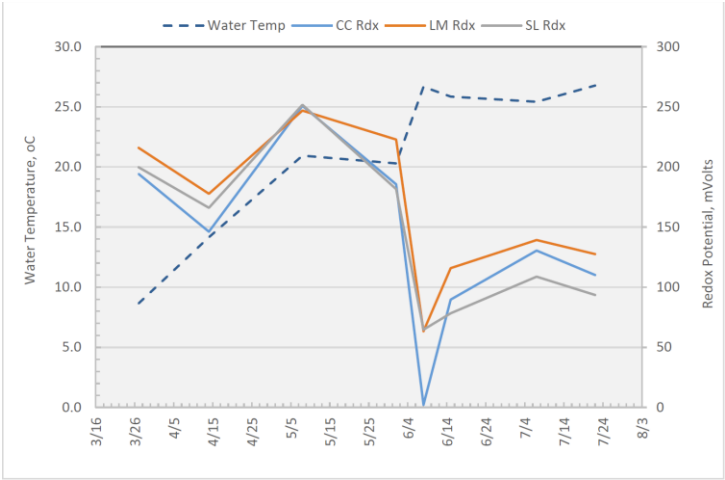

Figure 1.6. Oxidation-reduction potential and average water temperature in the bioreactors for 2017.

Nitrogen

At the beginning of 2017, the target stoichiometric ratio of C/N was 0.35, approximately 40% of the recommended value of 0.84. The reason for this reduction was to try and reduce the production of extracellular polymeric substances (EPSs). Extracellular polymeric substances are natural polymers of high molecular weight secreted by microorganisms. These compounds are important in biofilm formation. Excess production of EPSs has been shown to increase under nitrogen and phosphorus limited or depleted conditions. As a result of imbalances in the ratios of C:N:P, microorganisms generate EPSs as a self-defense mechanism. We hypothesized that the poor performance of the modular bioreactors in nitrate load reductions in 2017 was due to limited carbon in the cubes.

Nitrate concentration from the cubes followed the pattern of discharge volume during 2017 with maximum values in May and minimum values in July. The nitrate concentration decline in July was attributed to a decrease in drainage due to crop water uptake (Table 1.4). Comparatively, the mean nitrate concentration from the cubes and from the subsurface drainage was 15.7 and 17.7 mg/L, respectively, across all P-treatments and all months, overall an 11% reduction. No statistical difference between P-treatments was observed for nitrate concentration (p-values : 0.904; post-hoc Games-Howell test). On a monthly basis, the nitrate concentration difference between source water and cube bioreactors was highest in July (40.5%) compared to other months while it was the lowest in May with only 3.4% reduction (Table 1.5). Statistical analysis did not show any significant difference between the average nitrate load for the P-treatment cubes (p-values: 0.643, post-hoc Games-Howell).

Table 1.4. Mean NO3-N concentration (mg/L), in chronological order for 2017, from bioreactors grouped by P-treatment

P-Treatment	Mar-17	Apr-17	May-17	Jun-17	Jul-17
Crushed Concrete (n=3)	15.8	15.0	17.8	15.6	10.3
Limestone (n=3)	15.5	14.3	17.7	15.3	10.6
Steel Slag (n=3)	15.8	15.2	17.6	14.6	10.0
†Source water (n=1)	17.3	17.2	18.3	18.3	17.4

Table 1.5. Percent NO3-N concentration reduction, in chronological order for 2017, compared to subsurface drainage source water NO3-N concentration from bioreactors grouped by P-treatment

P-Treatment	Mar-17	Apr-17	May-17	Jun-17	Jul-17
Crushed Concrete (n=3)	8.5	13.1	2.9	14.8	40.6
Limestone (n=3)	10.6	16.7	3.4	16.4	38.8
Steel Slag (n=3)	8.5	12.0	3.8	20.1	42.1

The average monthly nitrate load from the cubes remained lower than that of the source water except for the month of May (Table 1.6). On average, the highest nitrate load reduction occurred during July with values ranging between 27 and 28%; the lowest nitrate load reduction, between 2 and 5%, occurred in May (Table 1.7).

Table 1.6. Mean NO_3-N load (kg), in chronological order for 2017, from bioreactors grouped by P-treatment

P-Treatment	Mar-17	Apr-17	May-17	Jun-17	Jul-17
Crushed Concrete (n=3)	0.237	1.485	1.932	1.241	0.377
Limestone (n=3)	0.198	1.358	2.309	1.493	0.629
Steel Slag (n=3)	0.247	1.387	2.076	1.194	0.463
†Source water (n=1)	0.252	1.671	2.185	1.576	0.638

Table 1.7. Percent NO3-N load reduction, in chronological order for 2017, from bioreactors grouped by P-treatment

P-Treatment	Mar-17	Apr-17	May-17	Jun-17	Jul-17
Crushed Concrete (n=3)	11.7	16.8	2.1	16.0	27.9
Limestone (n=3)	8.6	17.8	3.5	16.1	17.1
Steel Slag (n=3)	8.6	12.0	5.1	18.8	26.8

Phosphorus

An ANOVA for phosphorus concentration for P-treatment did not show any significant difference in the average values (p-value: 0.56). The trend for phosphorus concentration and load followed those of nitrate; in this case, April and May exhibited large phosphorus desorption values (Table 1.8 and Table 1.9). Table 1.8 shows that the average phosphorus concentration from the cubes in all P-treatments was more than double for April and May compared to that of the source water. The zero values in several cells of Table 1.9 are actually observed desorption of phosphorus; we hypothesized that the low monthly source water P concentration in April and May was driving the desorption of phosphorus from crushed concrete, limestone, and steel slag materials. Statistical analysis did not show any significant difference between the average phosphorus load for the P-treatment cubes (p-values: 0.582, post-hoc Games-Howell).

Table 1.8. Mean phosphorus concentration (ug/L) in 2017 from bioreactors grouped by P-treatment

P-Treatment	Mar-17	Apr-17	May-17	Jun-17	Jul-17
Crushed Concrete (n=3)	48.2	40.0	49.8	26.5	35.9
Limestone (n=3)	38.0	33.8	45.7	39.3	39.2
Steel Slag (n=3)	36.9	39.6	40.1	32.4	36.3
†Source water (n=1)	43.7	18.0	23.2	54.8	47.2

Table 1.9. Percent phosphorus concentration reduction, in chronological order for 2017, from bioreactors grouped by P-treatment

P-Treatment	Mar-17	Apr-17	May-17	Jun-17	Jul-17
Crushed Concrete (n=3)	0.0	0.0	0.0	51.7	24.0
Limestone (n=3)	13.1	0.0	0.0	28.4	17.0
Steel Slag (n=3)	15.6	0.0	0.0	41.0	23.2

The average monthly phosphorus load from the cubes was lower than that of the source water for the months of March, June and July (Table 1.10). As noted previously, the P sorbing material acted as a source of P during April and May. On average, the highest phosphorus load reduction occurred during June with values ranging between 28 and 57%; the lowest nitrate load reduction, between 25 and 78%, occurred in March (Table 1.11). Overall, when the P sorbing material was acting as a sink it was quite effective in removing P.

Table 1.10. Mean total phosphorus load (g) in 2017 from bioreactors grouped by P-treatment

P-Treatment	Mar-17	Apr-17	May-17	Jun-17	Jul-17
Crushed Concrete (n=3)	0.53	4.16	5.64	2.27	1.07
Limestone (n=3)	0.52	3.31	5.86	3.84	1.72
Steel Slag (n=3)	0.75	2.99	4.17	3.48	1.59
†Source water (n=1)	1.01	1.91	2.49	5.35	2.43

Table 1.11. Percent Phosphorus load reduction, in chronological order for 2017, from bioreactors grouped by P-treatment

P-Treatment	Mar-17	Apr-17	May-17	Jun-17	Jul-17
Crushed Concrete (n=3)	47.5	0.0	0.0	57.5	55.9
Limestone (n=3)	48.8	0.0	0.0	28.2	29.1
Steel Slag (n=3)	25.5	0.0	0.0	34.9	34.6

By combining load reduction values with actual values of desorption shown (Table 1.12), one can postulate that the crushed concrete treatment had the best recovery rate despite that it had the highest desorption rate with 2.82 g/month of phosphorus lost via out flow on average.

Table 1.12. Average phosphorus desorption rates calculated as (-ve) grams of phosphorus/month from each group of cubes based on load; CC: crushed concrete, LM: Limestone, SL: Steel Slag

Month	CC	LM	SL
March			
April	-2.19	-1.45	-1.09
May	-3.45	-3.05	-1.70
June			
July			
Average	-2.82	-2.25	-1.40

Conclusion

The environmental conditions that the bioreactors were subjected too in 2017 was typical of early spring conditions in the upper Midwest with high drain flow and associated low temperature conditions. The cubes experienced very low nitrate load reduction and phosphorus desorption during the months of April and May. The desorption of phosphorus was unexpected, but for the observed conditions when it occurred, nor surprising. Using phosphorus sorbing materials under the conditions found during this experiment lead to the conclusion that these materials should not be a component of bioreactors. The months June and July had better environmental conditions (higher temperature and slower flow discharge rates) that would have allowed satisfactory load reduction across all treatments.

Publications:

1. Strock, J., A. Ranaivoson, G. Feyereisen, K. Spokas, D. Mulla, and M. Roser. 2017. Novel design and field performance of phosphorus-sorbing and denitrifying bioreactors. p. 24-34. *In* J. Strock and A. Ranaivoson (eds.). Proceedings of 6th Soil and Water Management Field Day, 18 July, 2017. Univ. Minnesota, Southwest Research and Outreach Center, Lamberton, MN.

Student support: One undergraduate was partially supported by these funds.

Presentations:

1. A.Z. Ranaivoson and J.S. Strock. Minnesota Department of Agriculture Brown bag lunch presentation. 11 October, 2017.Title: Modular Bioreactors for mitigating nutrients from subsurface drainage.
2. A.Z. Ranaivoson and J.S. Strock. American Society of Farm Managers and Rural Appraisers (AFSRMA). 20 September, 2017. Lamberton, MN. Presenter. Title. Modular Bioreactors for treating tile drainage to remove nitrogen and phosphorus.
3. A.Z. Ranaivoson and J.S. Strock. Soil Science Society of America Annual Meeting. 23 October, 2017. Tampa, FL. Title: Novel Design and Field Performance of Phosphorus-Sorbing and Denitrifying Bioreactors.

Awards: None

Related Funding:

1. Integrated landscape management for agricultural production and water quality. Minnesota Department of Agriculture – Clean Water Fund. J.S. Strock (PI), B.J. Dalzell, A. Garcia y Garcia and A.Z. Ranaivoson. $365,780.00/$365,780.00. 2017-2020. (Awarded).
2. Bioelectrochemical reactor for treating agricultural drainage water. MN Corn Research and Promotion Council – Innovation Grant Proposal. J.S. Strock, A. Ranaivoson and G. Feyereisen. $9,400.00/$9,400.00. 2017-2018. (Awarded).

Open-Source Turbidity Sensor to Monitor Suspended and Dissolved Matter in Surface Water

Basic Information

Title:	Open-Source Turbidity Sensor to Monitor Suspended and Dissolved Matter in Surface Water
Project Number:	2017MN384B
Start Date:	3/1/2017
End Date:	2/28/2019
Funding Source:	104B
Congressional District:	MN 5
Research Category:	Water Quality
Focus Categories:	Sediments, Solute Transport, Surface Water
Descriptors:	None
Principal Investigators:	Andrew David Wickert, Diana Louise Karwan, Chad Sandell

Publication

1. Buechler, C., A. Hayden, A. Nightingale, S. Rogers, E. Sundberg, and J. Wolf (2018), Turbidity Sensor Senior Design Project, University of Minnesota, Minneapolis, MN.

Open-Source Turbidity Sensor to Monitor Suspended and Dissolved Matter in Surface Water

Andrew D. Wickert
Assistant Professor
Department of Earth Sciences and Saint Anthony Falls Laboratory
University of Minnesota

Diana L. Karwan
Assistant Professor
Department of Forest Resources
University of Minnesota

With significant technical and/or writing contributions from:

Bobby Schulz
Lab manager
University of Minnesota

Chad T. Sandell
Research specialist
University of Minnesota

Antony Aufdenkampe
Senior Environmental Scientist
LimnoTech

University of Minnesota Undergraduates
Corbin Buechler
Cassandra Chanthamontry
Amanda Hayden
Aaron Nightingale
Sean Rogers
Erik Sundberg
Jacob Wolf

1) Research:

This summary includes significant material from the senior design project report by Corbin Buechler, Amanda Hayden, Aaron Nightingale, Sean Rogers, Erik Sundberg, and Jacob Wolf

Motivation and Goals

Minnesota has thousands of lakes and streams that are fed by watersheds from which significant fine sediment and dissolved matter is sourced. As a result, turbidity of Minnesota's waters can be a serious problem for water quality and the enviroment. Beyond the borders of the state, turbidity is a leading cause of water quality impairment. Furthermore, measurements of turbidity can help to quantify total suspended solids concentrations and rates of landscape erosion.

Measuring turbidity across this wide range of water bodies is difficult with available time and resources. Available sensors are expensive, often costing over $1,000; when multiplied by Minnesota's >10,000 lakes and streams, the total cost for environmental monitoring could top $10 million for the sensors alone, without including data loggers, labor, data quality control and analysis, and data archiving. An open-source and inexpensive handheld turbidity meter has been developed [*Kelley et al.*, 2014], but this is not suited for long-term deployment and data storage. We therefore worked to develop a low-cost turbidity sensor that can be field deployed in remote locations.

For our group, simply making a sensor cheaper was not enough of an engineering goal in and of itself. Our first, and simpler, secondary objective was to make the turbidity sensor accurate over a wide range of turbidity values. Our second goal was to build a system that could distinguish solid from dissolved matter. This could, in principle, separate suspended sediment load from dissolved organic matter. Our third goal, to further cheapen and democratize the data-collection process, was to make the sensor compatible with low-cost and open-source Arduino-compatible data loggers: in particular, the ALog [*Wickert*, 2014] and the Mayfly [*Hicks et al.*, 2015].

With these motivations in mind, our team designed the turbidity sensor with the following technical specifications and approaches:

1. Open-source hardware design
2. Low cost, with a target price of <$100/unit
3. Accuracy to within <3%
4. The ability to separate suspended sediment from dissolved matter using a combination of transmission- and scattering-based measurements of turbidity
5. Fully waterproof for long-term field deployment (weeks to years)
6. I^2C digital communication
7. Development of an open-source Arduino-compatible firmware library
8. Low power consumption
9. Rapid measurements
10. Wide dynamic range

Our initial prototype succeeded in goals 1-7. Goals 8-9 are currently hindered by our software approach to measurements, and Goal 10 requires improved hardware to tune the light source to optimize the detector's resolution. Work towards these goals is ongoing with the continued support of this WRC grant.

Design

The exterior of the turbidity sensor consists of a waterproof aluminum box with a square acrylic water inlet tube mounted horizontally through the enclosure. Two infrared LEDs and two light intensity

sensors are mounted around this square tube so that each LED faces one of the sensors using a 3D printed shell that consisting of two parts that snap together. This part can hold the LEDs and IR sensors in place, is very low cost, and is easily reproducible from its SolidWorks CAD files. This arrangement allows the sensors to pick up the transmitted light agnd the 90 degree side-scattered light from each of the light sources. The LEDs used in our design have a wavelength of 860 nm, which was chosen to comply with the ISO 7027 standard for measuring turbidity. For light detection, we decided to use a pair of integrated circuits that sense light and output a square wave with a frequency that is proportional to the light intensity. These signals are collected by an ATmega328P microcontroller, which counts the number of rising edges over a period of time to determine the frequency. In most cases, this measurement is taken over one second, but it can be extended to up to two minutes to ensure that very low frequencies are counted accurately. Since the light sensors can output frequencies up to nearly 600 kHz, while the microcontroller's interrupts can only reach up to 75 kHz, the light sensors' outputs are routed through a pair of binary counters that effectively divide the output frequencies by eight before they reach the microcontroller's inputs. This process introduces a potential error when collecting low frequency signals, but this is minimized by extending the sampling period in these cases. Unfortunately, this approach can cause the measurement to require several minutes to be made, and we are currently working on an improved design that we hope will reduce measurement time to <1 minute.

In addition to capturing the outputs from the light intensity sensors, the ATmega chip also turns the LEDs on and off at the appropriate times. Since the maximum side-scattered light from a source is significantly less than the maximum transmitted light, we have developed a circuit that can light up each LED at a higher and a lower intensity to use as much of the light sensors' range as possible. The sensing routine first measures the amount of ambient light present by measuring the outputs of each sensor with both LEDs off. Next, it turns one LED on with a low intensity, and capture the transmitted light data from the sensor directly across from it. Next, that same LED is turned up to the higher intensity, and side-scattered light data will be read from the other sensor, positioned at a 90 degree angle. This is then repeated for the other LED source. This process repeats five times for each of these four lights measurements followed by a final ambient light measurement. These six collected values are then each averaged and stored until they can be sent to the connected data logger via I^2C. In future work, we will allow the LED intensities to vary across a wide range of values in order to find the light intensity that allows the detector to most precisely determine the amount of light loss.

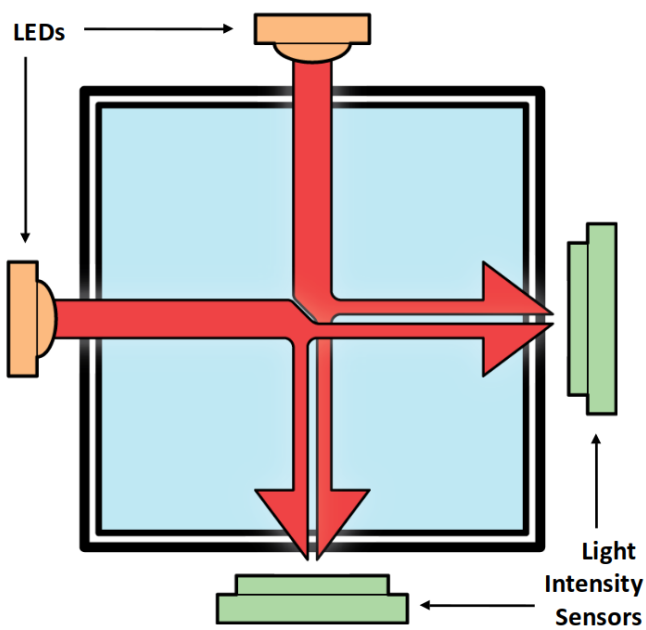

Figure 1. Schematic of the light transmission and scattering measurements through the acrylic tube.

The turbidity sensor can be connected to either the ALog or Mayfly data logger, which requests the current turbidity readings using an I2C interface. The data logger can convert these readings to the corresponding NTU value based on a calibration that was developed by measuring a selection of liquid samples with known turbidities. This NTU value, along with the six frequency measurements, are saved to an SD card on the data logger. After this, the data logger turns the turbidity sensor off and waits a certain amount of time for the next data point.

The waterproof enclosure and cable assemblies are some of the most crucial elements. The IP68 enclosure is from PolyCase, and is made of cast aluminum. This enclosure will not deteriorate when submerged in water. The square water inlet tube is made of acrylic for the same reason. In addition, it is clear, and will not deflect the light from the LED as to distort any data being measured. Another major benefit of this enclosure is the integrated rubber gasket, which creates a seal around the lid. In order to guarantee that the sensor enclosure would sink, a small square piece of granite was attached to the inside, underneath the circuit board. The plugs connecting the sensor to the cable are IP68 rated, and are designed for continuous submersion. The female panel mount plugs are not permanent when attached, so they can be moved from one enclosure to another without issue. This was ideal for testing and calibration. For power and communications, we used an insulated 6-conductor PVC cable. The insulation also will not degrade in water. The 6 conductors include power (2), communications (2), controls (1), and one unconnected conductor. Each cable has a male plug attached at one end, which then connects to its female pair on the box. All joints around the plugs and inlet tube are sealed with marine-grade silicone caulk.

This design satisfies goals 1-7, above. Improtantly, it exceeds expectations on price: For one sensor, the price is just under $89; due to economy of scale, this becomes $54 per sensor at a quantity of 100. Furthermore, its maximum power consumption during measurement is 6.6 mA, which allows >200 measurements to be made using a single set of D batteries. With improved software and electronics hardware, we hope to improve this to >2000 measurements before the end of the project. In addition, the sensor was calibrated using known standards and a calibration curve was developed. The enclosure was tested to be waterproof for several days, but has not yet been tested for a full field season. Finally, the enclosure was tested underwater for multiple days.

Symbol	Part	Manufacturer	Digi-Key Part Number	Quantity
C1, C2, C3	0.1 uF Ceramic Capacitor	KEMET	399-4329-ND	3
C4, C5	18 pF Ceramic Capacitor	KEMET	399-9718-ND	2
Q1, Q2	2N7000 N-Channel MOSFET	ON Semiconductor	2N7000TACT-ND	2
R1	10 kOhm Resistor	Stackpole Electronics	RNF18FTD10K0CT-ND	1
R2, R3	470 Ohm Resistor	Stackpole Electronics	RNF14FTD470RCT-ND	2
R4, R5	976 Ohm Resistor	Yageo	976XBK-ND	2
R6, R7	174 Ohm Resistor	Yageo	174XBK-ND	2
L1, L2	860 nm Infrared LED	OSRAM Opto Semi	475-3043-1-ND	2
U1	ATmega328P Microcontroller	Microchip Technology	ATMEGA328P-PU-ND	1
U2	SN74HC393N Dual Binary Counter	Texas Instruments	296-8319-5-ND	1
U4, U3	Light Sensor	AMS	TSL238-TCT-ND	2

X1	8 MHz Crystal	TXC Corporation	887-1008-ND	1

Table 1. Bill of Materials

Following the diagram of the completed aparatus (Figure 2, below), the schematic for the electrical portion of the turbidity sensor is shown on the following page (Figure 3). The abbreviated Bill of Materials on the previous page (Table 1) serves as a key to identify the individual parts in the schematic. The design as shown here produced some saturation/nonlinear behavior from the light sensors, which limited the amount of data that could be fit for conversion to Nephelometric Turbidity Units (NTU). Calibration data During the remainder of the work for this project, we will use a digital-to-analog converter (DAC) to tune the LED intensity to a linear portion of the light receiver's intensity spectrum.

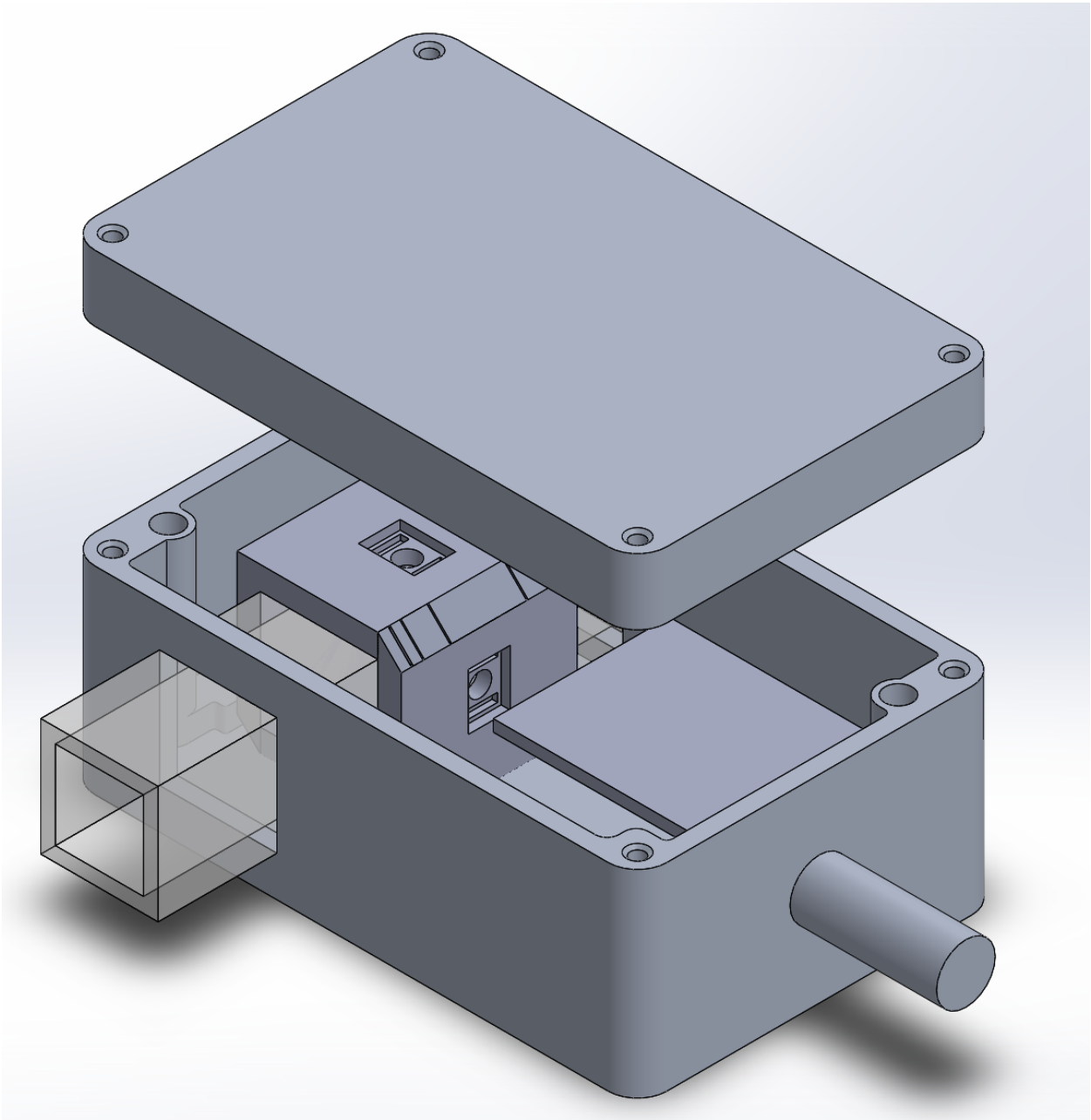

Figure 2. 3D model of the full unit, including the aluminum housing, the plug, the acrylic tube, and the 3D-printed housing for the electronics to go around the tube.

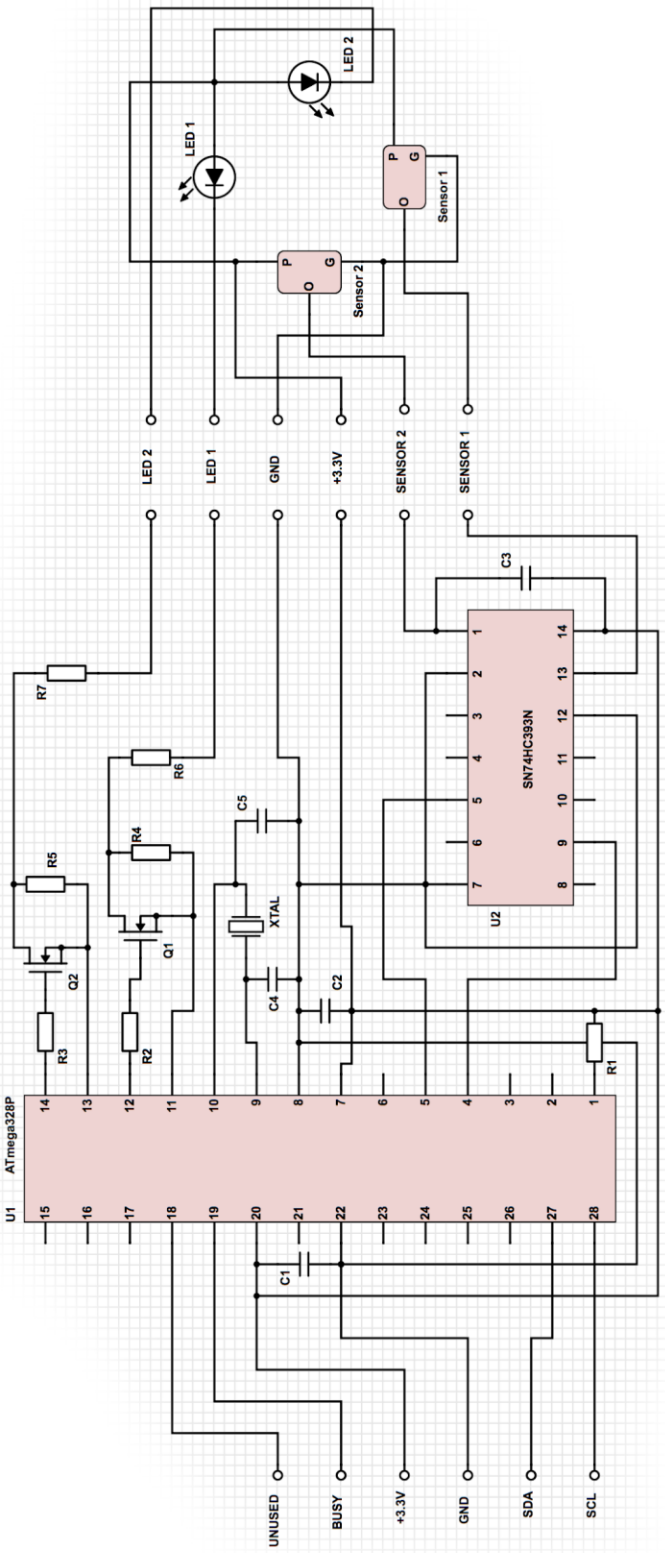

Figure 3. Electrical schematic for turbidity sensor.

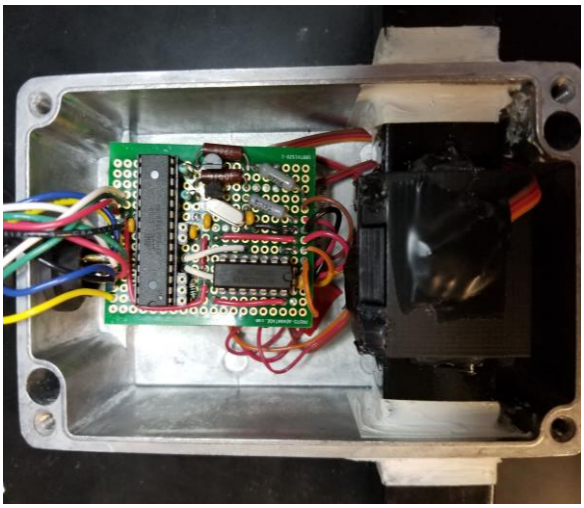

Figure 5. The view inside the completed prototype.

Calibration

Calibration was accomplished using a set of diluted Formazin turbidity standards (Figure 5), along with pure distilled water, which were read using the sensor. The Formazin standards were produced in our lab through serial dilution of a 4000 NTU standard.

The detector reached the edge of its dynamic range at low NTU values (Figure 6), inspiring our future work into an algorithm to automatically tune the sensor to find the proper turbidity value.

Figure 6. Reference turbidity standards produced in our lab from serial dilution of a 4000 NTU solution.

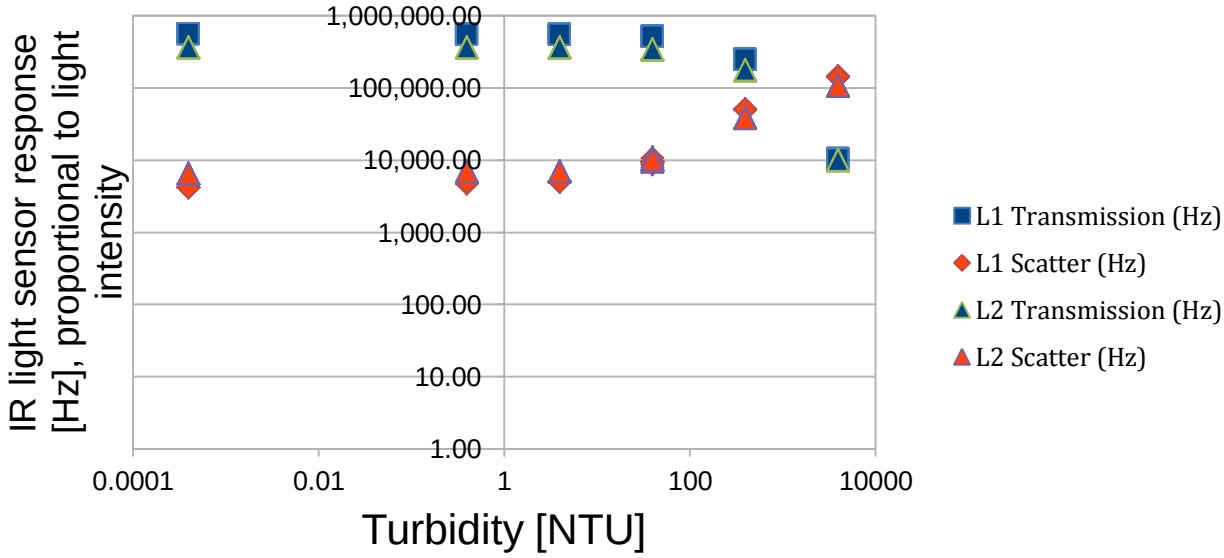

Figure 7. Sensor calibration, indicating a loss of resolution at low NTU values with the current LED brightness configuration.

Summary and Future Work

We developed a low-cost turbidity sensor that met the majority of our stated objectives. Our next goals are to:

- minituarize it by replacing the aluminum box with a form-fitting enclosure;
- design a circuit and associated software capable of sending a wide, variable, and highly specific input light intensity through the fluid in order to improve the dynamic range of the turbidity sensor; and
- further reduce cost and power consumption.

Furthermore, we would like to perform more extensive calibrations and tests of the turbidity sensor, both in the lab and in the field.

We are encouraged by our positive results from the first-generation sensor prototype, and believe that the remaining time on the grant will allow us to make significant progress towards these goals and a robust final design.

References

Hicks, S. D., A. K. Aufdenkampe, D. S. Montgomery, S. Damiano, and H. Brooks (2015), A New Arduino Datalogger Board for Simple, Low Cost Environmental Monitoring and the EnviroDIY Web Community, in *American Geophysical Union Fall Meeting*, p. H23G–1658.

Kelley, C. D., A. Krolick, L. Brunner, A. Burklund, D. Kahn, W. P. Ball, and M. Weber-Shirk (2014), An affordable open-source turbidimeter, *Sensors (Basel).*, *14*(4), 7142–7155, doi:10.3390/s140407142.

Wickert, A. D. (2014), The ALog: Inexpensive, Open-Source, Automated Data Collection in the Field, *Bull. Ecol. Soc. Am.*, *95*(2), 68–78, doi:10.1890/0012-9623-95.2.68.

2) Publications:

Buechler, C., A. Hayden, A. Nightingale, S. Rogers, E. Sundberg, and J. Wolf (2018), *Turbidity Sensor Product Launch Document*, University of Minnesota, Minneapolis, MN.

3. Student Support:

Undergraduate: 7 students.
Corbin Buechler
Cassandra Chanthamontry
Amanda Hayden
Aaron Nightingale
Sean Rogers
Erik Sundberg
Jacob Wolf

Funds also supported R. Schulz during a gap year between his B.S. and M.S.

4) Presentations:

Buechler, C., A. Hayden, A. Nightingale, S. Rogers, E. Sundberg, and J. Wolf (2018), *Turbidity Sensor Senior Design Project*, University of Minnesota, Minneapolis, MN.

5) Awards: include student awards and faculty awards that were granted during this same time frame.

[none]

6) Related Funding: please indicate if you have received any related funding that was in some way a result of the WRRI funds. Include title, sponsor, amount, PI and co-PIs, and project period.

[none thus far, but project is not yet complete]

Assessing the role of buffer strips in nutrient and organic matter export and mitigation of harmful algal blooms

Basic Information

Title:	Assessing the role of buffer strips in nutrient and organic matter export and mitigation of harmful algal blooms
Project Number:	2017MN388B
Start Date:	3/1/2017
End Date:	2/28/2019
Funding Source:	104B
Congressional District:	4th District MN
Research Category:	Water Quality
Focus Categories:	Agriculture, Ecology, Management and Planning
Descriptors:	None
Principal Investigators:	James B Cotner

Publications

There are no publications.

Annual Report

Assessing the Role of Buffer Strips in Nutrient and Organic Matter Export and Mitigation of Harmful Algal Blooms: PI-James Cotner

I. RESEARCH

At this point in time, we are still pulling the pieces together to complete this project. I have hired a number of undergraduates that will be working in my laboratory this summer to help with sampling of water bodies that are adjacent to landscapes with varying extent of surrounding vegetation. This summer we plan to be sampling systems in southwest Minnesota and northwest Iowa, central Minnesota and north-central Minnesota. We will sample approximately 10 systems in each of these locations.

In all of these systems, we will be examining the degree to which the organic matter in these systems is readily degraded. In addition, we will quantify the amount of organic carbon, nitrogen and phosphorus that is recalcitrant to microbial degradation processes at relatively long time scales (months to years). We will also examine the differing compositions on phytoplankton and bacterial communities in these different systems and the extent to which the lability of organic carbon, nitrogen and phosphorus phytoplankton and bacterioplankton communities co-vary.

II. PUBLICATIONS

We have not published work that directly originated from this project yet, but we recently had a paper accepted to Frontiers in Environmental Science on "Bioavailability of Dissolved Organic Phosphorus in Temperate Lakes" which is closely related to the work we will be doing on the present project.

III. STUDENT SUPPORT

We are currently supporting two undergraduate students to help with this project (Sara Crader and Benton Fry). I offered a summer position to Caylin Crawford who is a Native American student at Metropolitan State University to work help with sampling and analyses this summer.

IV. PRESENTATIONS

No presentations have been made based on the work in this project yet.

V. AWARDS

None

VI. RELATED FUNDING

We have funding through the College of Biological Sciences for a post-doctoral fellow that will assist with this project. The post-doc will specifically be responsible for analyzing molecular data related to phytoplankton and bacterioplankton community composition. This post-doc, Nicole Hayes, will begin her tenure here next week (4 June 2018).

Information Transfer Program Introduction

We did not fund any information transfers projects with our WRRI funds.

USGS Summer Intern Program

None.

Student Support					
Category	**Section 104 Base Grant**	**Section 104 NCGP Award**	**NIWR-USGS Internship**	**Supplemental Awards**	**Total**
Undergraduate	8	0	0	0	8
Masters	1	0	0	0	1
Ph.D.	0	0	0	0	0
Post-Doc.	0	0	0	0	0
Total	9	0	0	0	9

Notable Awards and Achievements

Jay Austin (WRS faculty) Professor in Physics and Large Lakes Observatory, SCSE is the recipient of the 2016-17 Chancellor's Award for Distinguished Research/Creative Activity.

Anna Baker (WRS MS student) received a WRS Travel Grant to present a poster entitled Sediment as Modulator of Phosphorus Dynamics in Post-Glacial Channels at the Geological Society of the Americas North East/North Central meeting in Pittsburgh, PA on March 19-21, 2017.

Brian Bohman (WRS PhD student) was awarded a fellowship with the MnDrive Global Food Ventures program for 2017-18. The Fellows participate in activities designed to help build their skills in communications and problem solving along with pursuing individual research projects.

Chelsea Delaney, Nicki DeWeese, and Adam Frankiewicz (all WRS MS students) were Butler and Jessen WRS Fellowship recipients. The Butler Jessen Water Resources Science Fellowship supports students admitted into graduate programs within the University of Minnesota's Water Resources Center, a leader in freshwater management that connects University of Minnesota expertise to research problems on the national level.

Lucinda Johnson, (WRS faculty, Associate Director and Initiative Director at UMD's Natural Resources Research Institute) was reappointed to a second three year term to the International Joint Commission's (IJC) Science Advisory Board. The board provides advice on research to the IJC and Great Lakes Water Quality Board. It also provides advice on referred scientific matters.

Lucinda Johnson (WRS faculty, Associate Director and Initiative Director at UMD's Natural Resources Research Institute) was appointed to the EPA's Board of Scientific Counselors as Vice Chair of the Executive Committee and member of the Safe and Sustainable Waters Subcommittee.

Sophie LaFond-Hudson (WRS PhD student) received a WRS Travel Grant to give a presentation entitled Iron Sulfide Precipitates on the Roots of Wild Rice at the annual meeting of the Midwest Chapter of the Society of Environmental Toxicology and Chemistry in Minneapolis on March 20-22, 2017.

Kirsten Rhude (WRS MS student) is the first recipient of the Water Resources Center Graduate Student Fellowship. Rhude is enrolled at UMD program and is working with WRS Professor Bob Sterner.

Faye Sleeper (former WRC Associate Director) received recognition from The Minnesota Climate Adaptation Partnership (MCAP) honoring her years of contributions in spearheading the formation, composition, and direction of the MCAP group.

Robert Sterner (WRS faculty, EEB UMD) received the Association for the Sciences of Limnology and Oceanography (ASLO) Martin award, which recognizes a paper in aquatic sciences that is judged to have had a high impact on subsequent research in the field. The 2017 Martin Award is for Algal nutrient limitation and the nutrition of aquatic herbivores by Robert Sterner and Dag Hessen.

Gloria Thomas (WRS PhD student) is the 2017 Smith Partners Sustainability Fellowship recipient. Thomas' research interests are environmental chemistry, environmental microbiology and water quality. The Smith Partners Sustainability Fellowship supports interdisciplinary study for Water Resources graduate students to pursue the connections between sustainable water resources management, economics, and public policy. The Fellowship affirms the University's commitment to sustainability initiatives through cultivation of interdisciplinary problem-solving, collaborative leadership, and public private partnerships.

Seth Thompson (WRS PhD student) received a WRS Travel Grant to present a poster entitled Stoichiometry of Water-Extractable Organic Matter in North American Grasslands at the annual meeting of the Association of the Sciences of Limnology and Oceanography in Hawaii on February 26-March 3, 2017.

Daniel Titze (WRS PhD student) University of Minnesota-Duluth, received the JGLR/Elsevier Student Author Award for his article Novel, direct observations of ice on Lake Superior during the high ice coverage of winter 2013–2014, Journal of Great Lakes Research 42: 492-501. This award recognizes a student scientist who is first author on a top-ranked article in the Journal of Great Lakes Research

Water Resources Students in Action (WRSIA) helped to organize Shared Water, Shared Responsibility: Engaging Minnesota's Communities, Students, & Policy-Makers event March 23 at the Humphrey School of Public Affairs. Co-sponsored by the University's Humphrey School of Public Affairs' Center for Science, Technology, and Environmental Policy and the University's Water Resources Center, the event addressed challenges facing clean water and explore how Minnesotans from all walks of life can play a role in promoting sustainable practices.

Inspired by Minnesota Governor Mark Dayton's Year of Water Action, the event included a reception and poster session on water research, followed by a panel discussion and Q&A with policy experts.