Techniques of Water-Resources Investigations

Book 9
Handbooks for Water-Resources Investigations

National Field Manual for the Collection of Water-Quality Data

Chapter A5.
PROCESSING OF WATER SAMPLES

Edited by **Franceska D. Wilde, Dean B. Radtke, Jacob Gibs, and Rick T. Iwatsubo**

USGS
science for a changing world

U.S. DEPARTMENT OF THE INTERIOR
GALE A. NORTON, *Secretary*

U.S. GEOLOGICAL SURVEY
Charles G. Groat, *Director*

Any use of trade, product, or firm names is for descriptive purposes only and does not imply endorsement by the U.S. Government.

For additional information write to:

Chief, Office of Water Quality
U.S. Geological Survey
12201 Sunrise Valley Drive
Mail Stop 412
Reston, VA 20192

Copies of this report can be purchased from:

U.S. Geological Survey
Information Services
Box 25286, Federal Center
Denver, CO 80225

Foreword

The mission of the Water Resources Division of the U.S. Geological Survey (USGS) is to provide the information and understanding needed for wise management of the Nation's water resources. Inherent in this mission is the responsibility to collect data that accurately describe the physical, chemical, and biological attributes of water systems. These data are used for environmental and resource assessments by the USGS, other government and scientific agencies, and the general public. Reliable and objective data are essential to the credibility and impartiality of the water-resources appraisals carried out by the USGS.

The development and use of a *National Field Manual* is necessary to achieve consistency in the scientific methods and procedures used, to document those methods and procedures, and to maintain technical expertise. USGS field personnel use this manual to ensure that data collected are of the quality required to fulfill our mission.

Robert M. Hirsch
Chief Hydrologist

Book 9
Handbooks for Water-Resources Investigations

Chapters of Section A, *National Field Manual for the Collection of Water-Quality Data*

A1. Preparations for Water Sampling

A2. Selection of Equipment for Water Sampling

A3. Cleaning of Equipment for Water Sampling

A4. Collection of Water Samples

A5. Processing of Water Samples

A6. Field Measurements
- **6.0 General Information and Guidelines**
- **6.1 Temperature**
- **6.2 Dissolved Oxygen**
- **6.3 Specific Electrical Conductance**
- **6.4 pH**
- **6.5 Reduction-Oxidation Potential—Electrode Method**
- **6.6 Alkalinity and Acid Neutralizing Capacity**
- **6.7 Turbidity**

A7. Biological Indicators
- **7.1 Fecal Indicator Bacteria**
- **7.2 Five-Day Biochemical Oxygen Demand**

A8. Bottom-Material Samples

A9. Safety in Field Activities

PROCESSING OF WATER SAMPLES

A5.

National Field Manual for the Collection of Water-Quality Data

Chapter A5.

	Page
Abstract	7
Introduction	7
Purpose and scope	8
Requirements and recommendations	9
Field manual review and revision	10
Acknowledgments	11
A5. Processing of Water Samples	13
5.0 General information D.B. Radtke and F.D. Wilde	13
5.0.1 Preparatory procedures	15
5.0.2 Sequence for processing samples	19
5.0.3 Field rinsing of bottles used to contain samples for analysis of inorganic constituents	20

5.1 Raw samples 23
D.B. Radtke, A.J. Horowitz, J. Gibs, and F.D. Wilde

5.1.1 Composites and subsamples 23

5.1.1.A Churn-splitter procedure 24

5.1.1.B Cone-splitter procedure 27

5.1.2 Ground water: pumped and bailed samples 31

5.2 Filtered samples 37
A.J. Horowitz, M.W. Sandstrom, and J. Gibs

5.2.1 Inorganic constituents 38

5.2.1.A Capsule-filter procedure 40

5.2.1.B Plate-filter procedure 48

5.2.2 Organic compounds 51

5.2.2.A Plate-filter procedure 53

5.2.2.B Capsule-filter procedure for processing samples for analysis of organonitrogen herbicides (optional) 59

5.2.2.C Procedures for processing samples for carbon analysis[1] **(Revised 1/2002)** 61

5.3 Solid-phase extraction of pesticides 75
M.W. Sandstrom

5.3.1 Solid-phase extraction by C-18 column 77

5.3.2 Solid-phase extraction by Carbopak-B™ column 82

5.4 Sample preservation 89
D.B. Radtke

5.4.1 Chilling 89

5.4.2 Chemical treatment 91

[1]Section 5.2.2.C (revised 1/2002) was rewritten to reflect changes in methodology. The original version of 5/99, with minor changes, appears as Appendix A5-D.

5.5 Handling and shipping of samples 95
D.B. Radtke

5.5.1 Labeling sample bottles 95

5.5.2 Filling out an Analytical Services Request form 96

5.5.3 Packaging samples 98

5.5.4 Shipping samples 101

5.6 Summary of sample-collection and sample-processing procedures for specific analytes 103
F.D. Wilde and Jacob Gibs

5.6.1 Common organic compounds 103

5.6.1.A Volatile organic compounds 104

5.6.1.B Semivolatile organic compounds, pesticides, organonitrogen herbicides, polychlorinated biphenyls 105

5.6.1.C Phenols 106

5.6.1.D Carbon **(Revised 1/2002)** 106

5.6.1.E Methylene blue active substances and oil and grease 107

5.6.2 Major ions and trace elements 108

5.6.2.A Major and minor cations and trace elements 108

5.6.2.B Nutrients (Nitrogen and Phosphorus) **(Revised 1/2002)** 109

5.6.2.C Anions 110

5.6.3 Stable isotopes and radiochemicals 111

5.6.3.A Carbon ($^{13}C/^{12}C$ and ^{14}C) 111

5.6.3.B Hydrogen ($^{2}H/^{1}H$) and oxygen ($^{18}O/^{16}O$) 113

5.6.3.C Nitrogen ($^{15}N/^{14}N$)..... 114

5.6.3.D Sulfur ($^{34}S/^{32}S$) 114

5.6.3.E Radium 226 and radium 228 116

5.6.3.F Uranium (U-234, U-235, U-238)..... 116

5.6.3.G Gross radioactivity 116

5.6.3.H Tritium 117

5.6.3.I Radon-222..... 118

5.6.3.J Tritium/helium-3 ($^{3}H/^{3}He$)..... 119

5.6.3.K Chlorofluorocarbons (CFC-11, CFC-12, CFC-113)..... 122

Conversion factors, selected terms, abbreviations, and chemical formulas CF-1

Selected references and internal documents..... REF-1

Publications on Techniques of Water-Resources Investigations TWRI-1

Appendix A5-A. Sample-designation codes and a summary of field-processing requirements for analyses of organic compounds in water..... APP-A-1

Appendix A5-B. Sample-designation codes and a summary of field-processing requirements for analyses of inorganic constituents in water..... APP-B-1

Appendix A5-C. Sample-designation codes and a summary of field-processing requirements for analyses of stable isotopes and radiochemicals in water APP-C-1

Appendix A5-D. Procedures for processing samples for analysis of dissolved and suspended organic carbon using a silver filter and gas-pressurized filtration apparatus **(Added 1/2002)** APP-D-1

Illustrations

5-1. An equipment system suitable for filtering samples for analysis of organic compounds 54

5-2. Worksheet for C-18 solid-phase extraction of pesticides 78

5-3. Worksheet for Carbopak-B™ solid-phase extraction of pesticides 84

5-4. Request form for equipment, instructions, and analysis of chlorofluorocarbon samples 126

Tables

5-1. Recommended sequence for processing samples 20

5-2. Directions for field rinse of bottles used to contain samples for inorganic-constituent analysis 21

5-3. Field cleaning and conditioning procedures for media used to filter samples for inorganic-constituent analysis 39

5-4. Field conditioning requirements for media used to filter samples for organic-compound analysis 52

5-5. Equipment for filtration of water-sediment samples for determination of organic compounds 53

5-6a. Equipment and supplies used to process samples for analyses of total particulate carbon and particulate inorganic carbon using the pressure-filtration method 63

5-6b. Equipment and supplies used to process samples for analyses of total particulate carbon and particulate inorganic carbon using the vacuum-filtration method 64

5-6c. Equipment and supplies used to process samples for analyses of dissolved organic carbon method 65

5-6d. Guidelines for selecting the volume needed for filtration of samples for analysis of suspended and particulate organic carbon 66

5-7. Checklist of general equipment and supplies required for broad-spectrum pesticide analysis by onsite solid-phase extraction 76

5-8. Equipment and supplies used for collection of samples for chlorofluorocarbon analysis 128

Chapter A5. PROCESSING OF WATER SAMPLES

Edited by **Franceska D. Wilde, Dean B. Radtke, Jacob Gibs, and Rick T. Iwatsubo**

ABSTRACT

The *National Field Manual for the Collection of Water-Quality Data (National Field Manual)* describes protocols and provides guidelines for U.S. Geological Survey (USGS) personnel who collect data used to assess the quality of the Nation's surface-water and ground-water resources. This chapter addresses methods to be used in processing water samples to be analyzed for inorganic and organic chemical substances, including the bottling of composite, pumped, and bailed samples and subsamples; sample filtration; solid-phase extraction for pesticide analyses; sample preservation; and sample handling and shipping.

Each chapter of the *National Field Manual* is published separately and revised periodically. Newly published and revised chapters will be announced on the USGS Home Page on the World Wide Web under "New Publications of the U.S. Geological Survey." The URL for this page is <http://water.usgs.gov/lookup/get?newpubs>.

INTRODUCTION

As part of its mission, the U.S. Geological Survey (USGS) collects the data needed to assess the quality of our Nation's water resources. The *National Field Manual for the Collection of Water-Quality Data (National Field Manual)* describes protocols (required and recommended procedures) and provides guidelines for USGS personnel who collect those data on surface-water and ground-water resources. Chapter A5 describes methods to be used in processing water samples to be analyzed for inorganic and organic chemical substances, including the bottling of composite, pumped, and

bailed samples and subsamples; sample filtration; solid-phase extraction; sample preservation; and sample handling and shipping. **Formal training and field apprenticeship are necessary in order to implement correctly the procedures described in this manual.**

The *National Field Manual* is Section A of Book 9 of the USGS publication series "Techniques of Water-Resources Investigations" (TWRI) and consists of individually published chapters designed to be used in conjunction with each other. A list of TWRI publications is included at the end of this report. Chapter numbers are preceded by an "A" to indicate that the report is part of the *National Field Manual*. Other chapters of the *National Field Manual* are referred to in the text by the abbreviation "NFM" and the specific chapter number (or chapter and section number). For example, NFM 6 refers to chapter A6 on "Field Measurements" and NFM 6.4 refers to the section in Chapter A6 on field measurement of pH.

The procedures described in this chapter represent protocols that are applicable to most USGS studies involving the collection of water-quality data. Modification of required and recommended procedures to fulfill study objectives or to enhance data quality must be documented and published along with the data and data interpretation.

PURPOSE AND SCOPE

The *National Field Manual* is targeted specifically toward field personnel in order to (1) establish and communicate scientifically sound methods and procedures, (2) encourage consistency in the use of field methods for the purpose of producing nationally comparable data, (3) provide methods that minimize data bias and, when properly applied, result in data that are reproducible within acceptable limits of variability, and (4) provide citable documentation for USGS water-quality data-collection protocols.

The purpose of this chapter on processing water samples is to provide field personnel and other interested parties with a description of the required and recommended procedures routinely used in USGS studies to composite, subsample, filter, preserve, and ship surface-water and ground-water samples to the USGS National Water Quality Laboratory (NWQL) for analysis. The sample processing procedures presented can be applied to the majority of samples that are analyzed routinely by NWQL for inorganic constituents and organic compounds. Samples that require special analysis or samples that are to be sent to other laboratories for analysis might require different processing procedures, the protocols for which are beyond the scope of this chapter.

REQUIREMENTS AND RECOMMENDATIONS

As used in the *National Field Manual*, the terms **required** and **recommended** have USGS-specific meanings.

Required (require, required, or requirements) pertains to USGS protocols and indicates that USGS Office of Water Quality policy has been established on the basis of research and (or) consensus of the technical staff and have been reviewed by water-quality specialists and selected District[1] or other professional personnel, as appropriate. Technical memorandums or other internal documents that define the policy pertinent to such requirements are referenced in this chapter. Personnel are instructed to use required equipment or procedures as described herein. Departure from or modifications to the stipulated requirements that might be necessary to accomplishing specific data-quality requirements[2] or study objectives must be based on referenced research and good field judgment, and be quality assured and documented.

[1]District refers to an office of the USGS, Water Resources Division, located in any of the States or territories of the United States.

[2]As used in this report, data-quality requirements are that subset of data-quality objectives pertaining to the analytical detection level for concentrations of target analytes and the allowable variability that fulfill study objectives.

Recommended (recommend, recommended, recommendation) pertains to USGS protocols and indicates that USGS Office of Water Quality policy recognizes that one or several alternatives to a given equipment selection or procedure are acceptable on the basis of research and (or) consensus. Specific data-quality requirements, study objectives, or other constraints might affect the choice of recommended equipment or procedures. Selection from among the recommended alternatives must be based on referenced research and good field judgment. Reasons for the selection should be documented. Departure from or modifications to recommended procedures must be quality assured and documented.

FIELD MANUAL REVIEW AND REVISION

Chapters of the *National Field Manual* will be reviewed, revised, and reissued periodically to correct any errors, incorporate technical advances, and address additional topics. Comments or corrections can be sent to NFM-QW, USGS, 412 National Center, Reston, VA 20192 (or direct electronic mail to nfm-owq@usgs.gov). Information regarding the status and any errata of this or other chapters can be found at the beginning of the electronic version of each chapter, located in the Publications section of the following Web site: http://water.usgs.gov/lookup/get?owq.

Newly published and revised chapters will be announced on the USGS Home Page on the World Wide Web under "New Publications of the U.S. Geological Survey," at http://water.usgs.gov/lookup/get?newpubs.

ACKNOWLEDGMENTS

The information included in this chapter of the *National Field Manual* is based on existing manuals, various reference documents, and a broad spectrum of colleague expertise. In addition to the references provided, important source materials include USGS handbooks, manuals, and technical memorandums. The editors and authors wish to acknowledge the following individuals in the USGS who developed the field and training manuals that provided the foundation for information on the collection and processing of water samples: M.E. Dorsey, T.K. Edwards, W.B. Garrett, W.J. Gibbons, R.T. Kirkland, L.R. Kister, J.R. Knapton, C.E. Lamb, R.F. Middelburg, J. Rawson, L.R. Shelton, M.A. Sylvester, and F.C. Wells.

The technical content of this report was enhanced by expertise from H.D. Ardourel, B.A. Bernard, R.W. Brenton, A.D. Bumgartner, M.R. Burkhardt, R.W. Carmody, B.F. Connor, T.B. Coplen, II, J.H. Eychaner, K.K. Fitzgerald, D.S. Francy, J.R. Garbarino, S.R. Glodt, J.A. Kammer, V.J. Kelly, J.W. LaBaugh, S.L. Lane, W.D. Lanier, R.W. Lee, D.K. Mueller, A.H. Mullin, C.J. Patton, L.N. Plummer, D.L. Rose, S.K. Sando, M.P. Schroeder, C.A. Silcox, A.H. Welch, W.R. White, and D.S. Wydoski. These scientists contributed significantly to the accuracy, quality, and usability of this report. Valuable editorial assistance was provided by I.M. Collies, C.M. Eberle, B.B. Palcsak, and Chester Zenone. Production assistance from C.T. Mendelsohn, A.M. Weaver, and L.E. Menoyo was instrumental in maintaining the quality of this report.

Special thanks go to T.L. Miller, whose encouragement and faith in this project was instrumental to its achievement, and to D.A. Rickert and J.R. Ward for providing the support needed to produce a national field manual for water-quality studies.

(Blank page)

PROCESSING OF WATER SAMPLES A5.

Edited by **Franceska D. Wilde, Dean B. Radtke, Jacob Gibs, and Rick T. Iwatsubo**

Sample processing forms a continuum with sample collection (NFM 4) and involves the compositing, subsampling (splitting), filtration, solid-phase extraction, preservation, and shipment of samples. Samples are most vulnerable to sampling artifacts, contamination, incorrect chemical treatment, and mislabeling during sample processing. Samples must be processed as soon as possible after collection.[3]

Sample processing: the measures taken to prepare and preserve a water sample as or after it is collected and shipped for laboratory analysis.

GENERAL INFORMATION 5.0

By **D.B. Radtke and F.D. Wilde**

How samples are processed depends on the targeted analytes and the intended use of the data. Processing procedures for some analytes might require modification of standard processing procedures, as described in section 5.6. **Equipment components must be made of materials that (1) will not contribute or sorb target analytes to or from the water sample, and (2) can withstand cleaning solutions**.

[3]Consult NFM 4 for collection of water samples, and in addition, NFM 1 for field preparations, NFM 2 for equipment selection, NFM 3 for equipment cleaning, NFM 6 for field measurements, NFM 7 for biological indicators, NFM 8 for bottom-material samples, and NFM 9 for field safety.

(Blank page)

PREPARATORY PROCEDURES 5.0.1

Use of the procedures described in this section will help to avoid mistakes and preserve sample integrity. Protocols that are applicable to most sampling efforts for surface water are described in detail in Horowitz and others (1994). Koterba and others (1995) describe the protocols for ground-water sampling that were designed for the National Water-Quality Assessment (NAWQA) Program; these protocols are generally applicable to the routine collection of ground-water samples. Field personnel are responsible for being familiar with any specific sampling protocols that might be required for their studies and programs, especially those that differ from the routine procedures covered by this field manual. For example, field procedures, bottle type, and sample preservation requirements differ for samples collected as part of the USEPA Drinking Water Program (National Water Quality Laboratory Technical Memorandum 97.05[4]).

- To minimize delays in sample processing, calibrate field instruments (NFM 6), and set up processing equipment and supplies in the work area before collecting the sample.
- Clean-sampling procedures are recommended as a general practice when processing raw samples, particularly those for analysis of trace levels of inorganic and organic analytes.
- **Clean-sampling procedures such as Clean Hands/ Dirty Hands techniques (NFM 4) are required when collecting samples to be filtered for analysis of trace elements** (Office of Water Quality Technical Memorandum 94.09; Horowitz and others, 1994; Koterba and others, 1995).

[4]The technical memorandums referenced in this manual are available on the World Wide Web; see “Selected References and Internal Documents” for memorandum titles, dates, and the Web Site address.

- **When using Clean Hands/Dirty Hands techniques:**
  - Designate the Clean Hands (CH) person and the Dirty Hands (DH) person before field work begins (table 4-2 in NFM 4).
  - **CH duties**: Has the only contact with the sample bottle; transfers sample from sampler to splitter; filters, extracts, and preserves sample.
  - **DH duties**: Operates sampling equipment and manages any contact with potential sources of contamination (for example, the churn carrier and pumps).
  - **CH and DH**: Both must wear appropriate disposable, powderless gloves (vinyl, latex, or nitrile for inorganic work; latex or nitrile for organic work).
- **Check sample-designation codes and processing requirements for each sample.** Requirements depend on program and laboratory protocols, study objectives, and data-quality requirements. Laboratory codes and processing requirements are summarized in Appendixes A5-A, B, and C.
  - **Organic analytes**. Identify the bottle requirement by checking the sample designation code (see in-text table below and Appendix A5-A). Use only containers that arrive clean, baked, and capped. **Discard any bottles that arrive uncapped**.
  - **Inorganic and radiochemical analytes**. Identify the bottle requirement by checking the sample designation code (see in-text table below and Appendixes A5-B and A5-C). For example, samples to be acidified must be collected in bottles that arrive from the laboratory acid rinsed and capped; **discard any acid-rinsed bottles that arrive uncapped**. Prerinse all bottles used for nutrients, major-ion, and trace-element samples with deionized water (DIW) before sampling. Field rinse bottles with the water to be sampled, if a field rinse is specified (section 5.0.3 and Appendixes A5-B and A5-C).

Common organic-compound sample-designation codes for the National Water Quality Laboratory of the U.S. Geological Survey

[Refer also to Appendix A5-A. ml, milliliters; °C, degrees Celsius]

Sample designation code	Bottle description and sample preservation
VOC	40-mL amber glass vials, laboratory cleaned and baked, for analysis of volatile organic compound sample (VOC or VOA); sample chilled to or below 4°C without freezing. Some programs require chemical treatment.
GCC	1-L amber, glass bottle, laboratory cleaned and baked, for various types of pesticides and organic-compound samples other than VOCs; sample chilled to or below 4°C without freezing.
TOC, DOC	125-mL amber glass bottle, laboratory cleaned and baked, for total (TOC) or dissolved (DOC) organic carbon; sample chilled to 4°C or below without freezing.

Common inorganic-constituent sample-designation codes of the National Water Quality Laboratory of the U.S. Geological Survey

[Refer also to Appendix A5-B and A5-C. mL, milliliter; <, less than; °C, degrees Celsius; L, liter]

Sample designation code	Bottle description and sample preservation
RA, FA	250-, 500-, or 1,000-mL polyethylene bottles, acid-rinsed, capped, to be filled with raw (RA) or filtered (FA) samples and acidified with nitric acid to pH <2.
RU, FU	250-, 500-, or 1,000-mL polyethylene bottles, uncapped, to be filled with untreated raw (RU) and filtered (FU) samples.
FCC	125-mL polyethylene bottles, uncapped, to be filled with filtered (FCC, brown bottle) sample for nutrient analysis and chilled to or below 4°C without freezing.
WCA, FCA	125-mL polyethylene bottles, uncapped; to be filled with raw (WCA, uncolored bottle) or filtered (FCA, brown bottle) sample for nutrient analysis, treated with sulfuric acid, and chilled to or below 4°C without freezing.
RAM, FAM	250-mL glass bottles, acid-rinsed, capped, to be filled with raw (RAM) or filtered (FAM) sample for mercury analysis, and treated with nitric acid/potassium dichromate solution.
FAR	1-L polyethylene bottles, acid rinsed, capped, to be filled with filtered (FAR) samples for radiochemical analysis and treated with nitric acid to pH <2.

- **Clean equipment and supplies as directed in NFM 3.**
  - **Organic analytes.** All containers arrive precleaned and baked from the laboratory. **Do not prerinse or field rinse these glass bottles or vials.** Samples to be analyzed for organic compounds are hereafter referred to as organic-compound samples.
  - **Inorganic analytes.** Prerinse bottles with DIW and store half filled with DIW. This procedure is required for all FA samples with target analytes at parts-per-billion (ppb) concentrations, and is recommended for all samples to be analyzed for inorganic constituents (hereafter referred to as inorganic-constituent samples) that also require field-rinsed bottles.
- **Set up a clean work area** at the field site for sample processing. (An appropriate area includes, for example, a mobile laboratory, a water-quality field vehicle (NFM 2), or clean space in a building near the sampling site.)
  - Protect the area from airborne sources of contamination such as dust, vehicle emissions, and vapors from inorganic chemicals and organic solvents.
  - Spread sheeting over the area where samples are to be processed. For inorganic-constituent samples, use plastic sheeting. For organic-compound samples, use aluminum foil.
- **Prevent direct contact with potential source(s) of contamination.**
  - Exclude airborne particulates by processing samples onsite in processing and preservation chambers.
  - Handle anoxic samples rapidly and under an inert gas atmosphere (NFM 4.0.3).
  - Keep hands gloved and away from potential sources of contamination while processing samples. While filling the sample bottle, the sample must not come in contact with gloved hands.
- **Keep sample-processing equipment covered** with a clean, noncontaminating material when not in use; keep sample bottles capped and covered or bagged.

SEQUENCE FOR PROCESSING SAMPLES 5.0.2

The order of sample collection, processing, and preservation for specific analytes should be determined before beginning field work and adhered to consistently. The recommended sequence for sample collection and processing is based on logistics for maintaining sample integrity and differs for ground-water and surface-water sampling. The recommended sequence can be modified, depending on the types of samples to be collected and on data objectives. In general, process samples in the order indicated on table 5-1.

- For ground-water sampling, the amount of well purging might affect concentrations of VOCs measured in the ground-water samples (Gibs and Imbrigiotta, 1990). Therefore, VOC samples are collected first.
- When sampling either surface water or ground water for inorganic analyses,
  - Filter trace-element samples first, as prescribed and explained in section 5.2 and in Horowitz and others (1994).
  - Next, filter nutrient, major ion, and other inorganic-constituent samples having concentrations that will not be appreciably affected as nominal pore size of the filter media decreases.
  - Filter the alkalinity sample (NFM 6) with the other anions.
- When composite samples of surface water are processed, samples for analysis of organic compounds usually are processed first and are taken from a noncontaminating compositing device separate from that for inorganic-constituent samples, unless a cone splitter is used (section 5.1).

Table 5-1. Recommended sequence for processing samples

1. Organic compounds—Raw (wholewater or unfiltered) samples first, followed by filtered samples. **Do not field rinse bottles.** Chill immediately a. Volatile organic compounds (VOCs). b. Pesticides, herbicides, polychlorinated biphenyls (PCBs) and other agricultural and industrial organic compounds.
2. Total organic carbon (TOC), dissolved organic carbon (DOC),[1] and suspended organic carbon (SOC). Chill immediately.
3. Inorganic constituents, nutrients, radiochemicals, isotopes: **For ground water,** filtered samples first, followed by raw samples. **For surface water,** raw samples first, followed by filtered samples. (Field rinse each bottle, as required.) a. Trace metals. b. Separate-treatment constituents (such as mercury, arsenic, selenium) and major cations. c. Major anions, alkalinity, and nutrients. Chill nutrients immediately. d. Radiochemicals and isotopes. (Bottle-rinse, filtration, and preservation requirements depend on analysis to be performed (section 5.6 and Appendix A5-C.)[2])
4. Radon and chlorofluorocarbons.[2] Do not rinse bottle.
5. Microorganisms (NFM 7).

[1]TOC and DOC samples can be collected whenever most appropriate for the specific field operation.
[2]Radon and chlorofluorocarbon and most isotope samples are collected outside of the processing chamber.

5.0.3 FIELD RINSING OF BOTTLES USED TO CONTAIN SAMPLES FOR ANALYSIS OF INORGANIC CONSTITUENTS

Most polyethylene sample bottles and only those glass sample bottles that are designated for analysis of inorganic constituents (inorganics bottles) are field rinsed as described in table 5-2. Check Horowitz and others (1994) and the laboratory requirements (summarized in Appendixes A5-B and A5-C) for more detailed discussions of field rinsing. **The field-rinse water normally is the same as the water that will fill the sample bottle: use wholewater sample for raw (unfiltered) samples and filtrate for filtered samples.**

- If the volume of sample obtained for processing is limited, DIW of the appropriate quality may be substituted as the rinse solution for the first two of the three required rinses.
- Wear disposable, powderless gloves while processing samples.

Check analyte requirements before field rinsing bottles. For example, DO NOT field rinse glass bottles that are designated for analysis of organic compounds.

Table 5-2. Directions for field rinse of bottles used to contain samples for inorganic-constituent analysis

[DIW, deionized water; mL, milliliters]

Bottle Preparation
• If bottles were previously rinsed and half-filled with DIW[1], discard DIW and rinse once only with the water to be sampled. Use filtrate for filtered samples and wholewater for raw samples.
• If bottles were not prerinsed with DIW, rinse twice with DIW onsite, followed by one field rinse with the water to be sampled (use only 25-mL filtrate for bottle rinse for the filtered sample[1,2]).
Field-Rinse Technique
1. Put on disposable, powderless gloves.
2. Fill sample bottle about 1/10 full of rinse water. Cap bottle.
3. Shake the bottle vigorously to rinse all interior surfaces.
4. Discard rinse water by swirling the solution out of the bottle.
5. Shake off adhering droplets.

[1]Required for filtered trace-element samples (Horowitz and others, 1994).
[2]Refer to section 5.2.1.A for detailed guidance relating to surface-water and ground-water samples.

(Blank page)

RAW SAMPLES 5.1

By **D.B. Radtke, A.J. Horowitz, Jacob Gibs, and F.D. Wilde**

Raw samples, commonly referred to as wholewater or unfiltered samples, are collected directly into the appropriate type of sample bottle from the sampling device (such as a submersible pump, sample-compositing device, peristaltic pump, or cone splitter). It is recommended that this sample collection take place within a processing chamber, especially if analyte concentrations are expected to be near the detection limit, to prevent contamination from airborne sources.

- Equipment must be clean before samples are collected and processed.
- Disposable, powderless gloves must be worn throughout sample collection and processing. In order to withstand the solvents or chemicals that could be contacted, vinyl gloves are adequate for inorganic work, but use of organic solvents for organic work requires latex or nitrile gloves.

COMPOSITES AND SUBSAMPLES 5.1.1

Surface-water samples normally are composited and processed through sample splitting (subsampling) devices (NFM 2). Ground-water samples are not composited but are pumped either directly through a splitter or through a filtration assembly (filter assembly) into sample bottles, unless a bailer or other thief-type sampler is used to collect the sample. Inorganic-constituent samples usually are composited in the churn splitter, and organic-compound samples commonly either are composited in a 20-L glass, fluorocarbon polymer, or metal container, or are processed through a cone splitter.

Only the Clean Hands person fills sample bottles with water withdrawn from the churn or cone splitter (NFM 4).

Two types of water-sample splitters commonly used by the USGS are the polypropylene churn splitter (churn) and the fluorocarbon polymer cone splitter (cone).[5] Each splitter has specific advantages and disadvantages (NFM 2.2.1). By convention, the churn usually is used only for inorganic-constituent (and possibly for suspended organic carbon) samples. The churn is constructed of plastic materials that can potentially affect concentrations of other organic compounds. The cone is constructed of fluorocarbon polymer material and can be used for either inorganic-constituent or organic-compound samples. **Program or study protocols might dictate which equipment to use.**

- Either the churn or cone splitter can be used for splitting raw samples with suspended-sediment concentrations up to 1,000 mg/L.
- Only the cone splitter can be used for splitting raw samples with suspended-sediment concentrations up to 10,000 mg/L (Office of Water Quality Technical Memorandum 97.06).
- The splitting accuracy of the cone splitter is unknown for suspended-sediment concentrations between 10,000 to 100,000 mg/L (Office of Water Quality Technical Memorandum 97.06), but data are available that indicate the splitting accuracy of the cone is unacceptable at concentrations of 100,000 mg/L or more.

5.1.1.A Churn-Splitter Procedure

Subsamples collected from the composite sample in a churn splitter must be processed according to the specific procedures described below, using Clean Hands/Dirty Hands (CH/DH) techniques as applicable.

1. Assemble sample-processing equipment and supplies on a clean work surface.
   - Put on appropriate, disposable, powderless gloves (gloves). (Wearing multiple pairs of gloves at one time provides an efficient means of changing gloves quickly.)

[5]Consult the following references for more detailed information about the churn and cone splitters: Office of Water Quality Technical Memorandums 76.24-T, 80.17, 94.13, and 97.06; Capel and others (1995); and Capel and Larson (1996).

- If hand contact is made with a potential contaminant, remove the outer (contaminated) gloves before continuing with sample processing.
- For CH/DH techniques: Remove churn splitter and inner bag from churn carrier. Leave the churn carrier and outer bag outside the processing area (vehicle or building).

2. Place all prelabeled wholewater or suspended-material bottles within easy reach of the churn spigot.
3. Churn the composite sample at a uniform rate by raising and lowering the disk inside the churn splitter with smooth, even strokes.
   - When churning, the disk should touch bottom on every stroke, and the stroke length should be as long as possible without breaking water surface. **Do not break the surface of the water**.
   - **The churning rate should be about 9 inches per second (in/s).** If the churning rate is significantly greater than 9 in/s, or if the disk breaks the surface of the water, excessive air is introduced into the sample and could affect dissolved gases, bicarbonate, pH, and other characteristics of the sample.
   - Inadequate churning can result in withdrawal of nonrepresentative wholewater or suspended-material samples.
4. Pre-mix the composite sample by churning for about 10 strokes to uniformly disperse suspended material before subsampling.
5. **Raw subsample.** Withdraw the raw subsamples for wholewater or suspended-materials analyses first.
   - Withdraw an adequate volume of sample water for the field rinse while continuing to churn.
   - **Withdraw the first subsample.** The first subsample withdrawn from the churn should be the largest volume required (usually a 1-L sample).
   - Do not interrupt the churning/subsampling process, if possible. If an interruption occurs, reestablish the churning rate and remix the sample by churning ten strokes before resuming subsampling.
   - As the volume of composite sample in the churn decreases, adjust the stroke length to maintain a churning rate of about 9 in/s and avoid breaking the surface of the water being sampled.

6. Check requirements for sample preservation. **For raw samples that require chemical treatment ⇨ Go to section 5.4.**
   - For raw samples that require chilling without chemical treatment(s)—Pack samples in ice or refrigerate as quickly as possible. Maintain at or below 4°C without freezing (section 5.4).
   - For raw samples that do not require chilling or chemical treatment—Set samples aside in a clean area for shipping to the laboratory (section 5.5).
7. **Filtered samples ⇨ Go to section 5.2.** After wholewater or suspended-material subsampling is complete, use the remainder of the composite sample in the churn for filtered samples.
8. Empty the churn after the required number of samples has been processed.
   - If the churn will be reused during the field trip, disassemble and field clean onsite while still wet, as described in NFM 3.
   - If the churn will not be reused during that trip, rinse with DIW before it dries out, place it in a plastic bag and in the churn carrier to be transported back to the office laboratory for cleaning.
9. Document on field forms and in field notes the types of samples collected and the splitting procedures used.

A field blank might be required after all sampling and processing equipment has been field cleaned (NFM 4.3).

TECHNICAL NOTES: Subsamples totaling 10 L and 5 L can be withdrawn from the 14-L and 10-L churn, respectively, for samples for wholewater analysis. The sample volume remaining in either churn may be used for filtered samples.

The churn splitter is used to split samples with particle sizes ≤ 250 µm and suspended-sediment concentrations ≤1,000 mg/L. Splitting accuracy becomes unacceptable at particle sizes > 250 µm and concentrations > 1,000 mg/L.

Cone-Splitter Procedure 5.1.1.B

Inorganic-constituent and organic-compound samples can be split using a fluorocarbon polymer (Teflon™) cone splitter. Although the cone splitter is used primarily for simultaneous distribution of surface-water samples into bottles, the cone also can be used similarly for a bailed or composited ground-water sample. The sample is poured into the splitter from the sampling device or transferred from a noncontaminating compositing container. If used for splitting pumped ground-water samples, the sample is pumped directly into the cone splitter.

1. Put on appropriate, disposable, powderless gloves (gloves). Remove cone splitter from protective covering.
2. Prepare a processing area that is protected from dust and fumes. Preferably, the cone splitter is installed in a processing chamber or covered with a large plastic bag.
3. Install cone splitter (see NFM 2, fig. 2-10, for a labeled diagram). **The cone splitter is built to close tolerances to achieve accurate and reliable operation and requires the following:**
   - **Use a bull's-eye level to level the cone splitter: this is critical for accurate performance.**
   - All tubes exiting the cone splitter must be the same length, as short as possible, and precleaned. Organic-compound samples require fluorocarbon polymer tubing. Carry a separate set of tubes for each site, and clean all sets on return to the office laboratory. If extra tubes are not available, do not reuse tubes for multiple sites without first cleaning them.
   - Push tubes as far as possible into the fittings on the splitter.

Minimize atmospheric contamination—Cover the cone splitter and sample bottles during the sample splitting process and when not in use.

4. Field rinse cone splitter and the appropriate sample bottles with the water to be sampled. **Do not field rinse laboratory-cleaned and baked glass bottles.**
   a. Open cover to access cone-splitter reservoir. (Flap or access slots for hands can be cut into the plastic bag covering the splitter.)
   b. Transfer 2 to 4 L of the sample into the cone-splitter reservoir. Some splitter reservoirs may be retrofitted with a funnel to ease pouring.
   c. Close cover and lightly tap splitting system to dislodge adhering water drops. Discard rinse water.
   d. Field rinse bottles for raw samples (RA, RU, and so on) with wholewater sample. Do not use the water sample previously processed through the cone splitter; follow directions in table 5-2.
5. Place bottles for raw samples under outlet tubes. Complete splitting procedure first with bottles for organic-compound samples, next with bottles for inorganic-constituent samples.
   - Place outlet tubes into sample bottles to prevent spilling. **Outlet tubes should not extend beyond the neck of the sample bottle. Do not submerge the ends of outlet tubes in the sample.**
   - Outlet tubes can be combined to collect various combinations of volumes of the original sample. Make sure no back pressure results from restrictions of water and air flow if combining outlet tubes into a single bottle.
   - Direct sample discharge from unused outlet tubes to waste.
6. Pour (or pump) sample into cone splitter. If hand contact is made with a potential contaminant while using CH/DH techniques, remove outer contaminated glove(s) or put on a new pair of gloves before transferring sample to cone splitter.
   a. Gently shake or agitate sample for at least 10–15 seconds to resuspend any particulate matter present in sampler bottle or discrete sampler (such as a bailer).

b. Transfer sample to cone-splitter reservoir (some splitter reservoirs may be retrofitted with a funnel to ease filling).

- Open cone-splitter cover and invert sampler or compositor containing sample over splitter reservoir. (If using a bailer, empty through bottom-emptying device. If using a pump, hold sample line over the cone-splitter reservoir and pump sample directly into the cone splitter.)
- First, collect organic-compound samples into clean, baked glass bottles (Appendix A5-A).
- Next, collect inorganic-constituent samples into cleaned and field-rinsed polyethylene bottles or as designated (Appendix A5-B or A5-C).

c. Maintain a head of water above the splitter standpipe to prevent air from entering the splitting block while rapidly transferring the sample. **Do not spill any of the sample when pouring or pumping it into the cone splitter.**

d. For proper operation, the splitter standpipe must be discharging at full-flowing capacity.

- **Never overfill sample bottle.**
- **Always transfer the entire composite sample into cone splitter** for thorough distribution into the sample bottles.

7. **When splitting the samples, avoid exposing samples to direct sunlight or freezing conditions.** During sample splitting, the temperature of samples from the cone splitter should remain constant.
8. Close cone-splitter cover.
9. After flow has stopped, lightly tap the cone splitter to dislodge adhering drops.
10. Remove sample bottles and cap them immediately.
11. **To obtain smaller subsample volumes**, position bottles at cone outlet ports and pour a sample from the preceding set of split samples into the cone splitter. **For inorganics only, remember to rinse each new set of polyethylene sample bottles with DIW and sample as previously directed** (sections 5.0.1 and 5.0.3).

12. If multiple passes through the cone are required, randomize the ports selected. This minimizes bias from differences in ports caused by manufacturing processes.
13. Check requirements for sample preservation. **For samples that require chemical treatment ⇨ Go to section 5.4.**
    - For raw samples that require chilling without chemical treatment(s)—Pack samples in ice or refrigerate as quickly as possible. Maintain samples at or below 4◦C without freezing (section 5.4).
    - For raw samples that do not require chilling or chemical treatment—Set samples aside in a clean area for shipping to the laboratory (section 5.5).
14. **Filtered samples ⇨ Go to section 5.2.** Remember to use only sample filtrate for the bottle field rinse.
15. Clean cone splitter, following instructions in NFM 3.
    - Disassemble and clean in the field before reusing. Field cleaning between sites must be done onsite while the cone splitter is still wet.
    - If the cone splitter will not be reused immediately, rinse with DIW and place in a plastic bag for transporting back to the office laboratory for cleaning.
16. Document on field forms and in field notes the types of samples collected and the splitting procedures used.

A field blank might be required after sampling and processing equipment has been field cleaned (NFM 4.3).

GROUND WATER: PUMPED AND BAILED SAMPLES 5.1.2

Steps for filling bottles with raw sample pumped from water-supply wells and monitoring wells are described in this section (refer also to section 5.6 and Appendixes A5-A, A5-B, and A5-C). The equipment needed and the procedures required to purge a well and withdraw the sample are described in NFM 2 and NFM 4, respectively, and are only briefly described below.

The recommended method for withdrawing ground-water samples from conventional supply or monitoring wells is to use a submersible or peristaltic pump and to pump the sample directly to a processing chamber (or to a glove box filled with inert gas).[6] Ground-water samples collected using a bailer or other discrete sampling device can be processed either as described under 5.1.1 (composites and subsamples) or within a processing chamber (or glove box), as described later in this section.

Only the Clean Hands person fills the sample bottle inside of the sample-processing chamber (NFM 4).

Collect/process equipment blanks, field blanks, replicates, and other types of quality-control (QC) samples periodically (NFM 4.3 and Appendix A4-B of NFM 4). The frequency, number, types, and distribution of QC samples are determined ahead of time according to the study workplan. Nevertheless, in the event of unforeseeable field conditions (for example, dust storms, new point source(s) of contamination, or application of agricultural or other chemicals), **field personnel must judge whether to process additional QC samples**.

- Replicates of environmental samples—Fill bottles one after the other (NFM 4.3).
- Field blanks—Process according to the study quality-assurance plan or as needed (NFM 4.3).

[6]Wells or devices constructed to obtain samples under natural flow gradient (passive) conditions are not addressed in this report.

Processing of samples

The steps listed below for processing raw ground-water samples are based on the assumption that both organic-compound and inorganic-constituent samples will be collected. Before proceeding, check section 5.6 for analyte requirements.

- Prelabel bottles with site identification, sample designation, date, and time (section 5.5 and NFM 1).
- Process samples in the order recommended for sample collection listed on table 5-1. This helps to limit overpurging of volatile compounds, reduce airborne contamination and cross contamination among samples and sites, and minimize discrepancies in the ionic mass balance.
- When pumping the sample, do not stop the pump or interrupt flow to the processing chamber during sampling. The rate of flow during sampling should remain constant throughout processing and be the same as the rate of flow while making final field measurements at the end of purging (NFM 4, NFM 6).

To process ground-water samples for organic-compound analyses:

1. Put on appropriate (latex or nitrile), disposable, powderless gloves (gloves). Cover bench or table with a sheet of aluminum foil to make a clean work surface.
2. Assemble necessary equipment and supplies on the clean work surface, and remove aluminum foil wrapping from precleaned equipment. Attach processing chamber cover. (Processing of organic-compound samples within a chamber is not mandatory but is recommended.)
3. Check requirements for treatment of the sample(s) collected.
   - If collecting a VOC sample that will be acidified—Test for the number of drops of HCl needed to lower sample pH to ≤ 2 using 40 mL of the final purge water. Dispense the HCl from a dropper bottle.
   - All samples processed for organic-compound analysis are to be chilled to 4°C or below without freezing.
4. Place bottles and other equipment needed for processing raw samples into processing chamber. If collecting samples for VOCs, place only VOC vials and VOC equipment in the chamber.

5. Withdraw samples from the well.

If using a pump—

a. Purge wells first, preferably with the same pump to be used for withdrawing the samples. Consult NFM 4.2 for purging procedures.

b. Check that the discharge end of sample line from the pump or manifold is secured in the processing chamber.

c. Direct sample flow through the sample line into the processing chamber (NFM 4.2).

- Waste initial sample through chamber drain for the sample-line rinse; do not let sample spray onto chamber cover—change chamber cover if this happens.
- Check for air bubbles in the sample line; tap the line or make adjustments to remove any air from the line.
- Flow should appear smooth and uniform (with no splashing) and should not exceed 150 mL/min when filling 40-mL VOC vials or 500 mL/min for larger bottles.

If using a bailer—

a. Purge wells first, using a pump (NFM 4.2). Do not purge wells with a bailer unless absolutely necessary.

b. Set up holding stand, as appropriate.

c. Lower the sampler (after field rinse) smoothly into the well; cause as little disturbance to the water column as possible. Follow analogous directions as those for sampler field rinsing (NFM 4.0.2.A).

d. After reaching the sampling depth within the screened or open interval, collect sample by raising the sampler smoothly (minimizing disturbance to water column). Keep the deployment line clean and untangled as sampler is lowered and raised.

e. Place sampler into holding stand and insert sample-delivery tube/device.

> TECHNICAL NOTE: Sampling from wells with a bailer or other discrete sampling device is not recommended if target analytes (such as trace elements and hydrophobic organic compounds) are those that typically associate or partition to particulates because deployment of bailers or other point-source samplers usually stirs up or otherwise mobilizes particulates. Fine-grained and colloidal-sized particulates can persist in the water column, causing a potential for bias.

6. Collect all raw organic-compound samples into designated bottles.
   a. Fill VOC vial from bottom of vial to overflowing without entraining air bubbles. Leave a convex meniscus. If sample will not be acidified, cap vial securely, invert, and check for air bubbles. **Follow directions in section 5.6.1.A.**
   b. If acidification of the sample is required,
      - The preservative can be added to VOC samples while samples are inside the processing chamber as long as the chemical treatment will not affect any subsequent samples to be collected for analysis of organic compounds. Otherwise, acidify VOC samples in a preservation chamber.
      - Add 1 to 5 drops of HCl to the sample (sections 5.4 and 5.6). Usually two drops of HCl are sufficient to lower the pH of the VOC sample to ≤ 2. Cap vial securely, invert, and check for air bubbles. If air bubbles are present, discard the vial and start again.
      - Change cover of processing chamber and change gloves.
   c. Place remaining raw organic-compound sample bottles into processing chamber. Fill bottles directly from the sample line to the shoulder of each bottle (section 5.6.1.B).
7. For filtered organic-compound samples:
   a. Place aluminum plate-filter assembly into chamber for pesticides and other filtered organic-compound samples. Change gloves.
   b. Load the filter, connect the plate-filter assembly, and field rinse the filter as directed in section 5.2.2.A.
   c. After following filtration directions in section 5.2.2.A, pass bottles out of chamber for DH handling.
8. After processing raw and filtered organic-compound samples:
   a. Fill sample bottle with DIW and label "temperature-check sample" to accompany chilled organic-compound samples.
   b. Remove the equipment used to process the samples and pass to DH.
   c. Discard chamber cover.
   d. Remove aluminum foil covering from work bench.
9. **Sample preservation ⇨ Go to section 5.4.**

Process ground-water samples for inorganic-constituent and remaining analyses:

1. Direct flow of pumped sample away from the processing chamber. Change to vinyl or latex, disposable, powderless gloves (gloves).
2. Cover bench or table with a plastic sheet to make a clean work surface. Change processing chamber cover. Assemble equipment and supplies needed on the clean work surface. Remove plastic wrapping from pre-cleaned equipment. Change gloves.
3. **For filtered inorganic-constituent, nutrient, radiochemical, and isotope samples**:
   a. Place filtration equipment, sample bottles (prelabeled), and other supplies and equipment for filtered inorganic-constituent samples into processing chamber. Change gloves.
   b. Connect filtration equipment as directed in section 5.2.1.
   c. Resume sample flow to the chamber.
      - Check for air bubbles in the sample line; tap line or make adjustments to remove air from the line.
      - Flow should be smooth and uniform—about 500 mL/min to fill sample bottles without splashing.
   d. Collect all filtered inorganic-constituent samples first, as directed in section 5.2.1.
4. Disconnect the filter assembly. Change gloves.
5. **Raw inorganic-constituent, nutrient, radiochemical, and isotope samples:**
   a. Place prelabeled bottles for raw samples into the processing chamber. Change gloves.
   b. Field rinse bottles with raw sample (section 5.1, table 5-1).
   c. Collect samples into designated bottles.
   d. Place bottles outside of chamber. Change gloves.
6. Remove equipment, discarding chamber cover appropriately.
7. **Sample preservation ⇨ Go to section 5.4.**
8. **Radon and CFC samples ⇨ Go to section 5.6.**

Blank page

FILTERED SAMPLES 5.2

By **D.B. Radtke, A.J. Horowitz, and M.W. Sandstrom**

Filtration is the physical process used to separate the particulate and aqueous fractions of a water sample. Samples are filtered for several purposes; for example, to remove microorganisms in order to help preserve ambient analyte concentrations, to remove suspended materials that interfere with specified analytical procedures, and to determine chemical speciation and fractionation of trace elements for geochemical studies.

Study objectives and the analytes targeted for study dictate the filtration method and equipment to be used. Ambient concentrations of filtered analytes typically can be near the limit of detection; therefore, field personnel must pay strict attention to possible sources of contamination from sampling and processing equipment, construction material of the chamber frame and of the filtration equipment, and the way the equipment is handled. (Equipment and supplies used to filter water samples are described in detail in NFM 2.)

- Check the composition and pore size of the filter medium and the effective filtration area of the filter; these can affect the quality and accuracy of the data and can compromise data-quality requirements.
- To minimize airborne contamination,
  - Filter samples within a processing chamber.
  - Add chemical treatments to samples within a separate preservation chamber.

Filter samples during or immediately after sample collection.

5.2.1 INORGANIC CONSTITUENTS

Most filtration systems currently used by the USGS are appropriate for filtering wholewater samples, if the limitations of each system are taken into account. **Standard USGS procedure is to filter inorganic-constituent wholewater samples through a 0.45-micrometer (µm) pore-size disposable capsule filter.** Filtration through media with pore sizes other than 0.45 µm or with other equipment (such as tangential-flow devices) depends on the use and interpretation of the data and can yield substantially different results for trace-element concentrations.

Data-quality requirements for interpretive studies of ground-water and surface-water chemistry can dictate filtering the sample through a nominal pore size of ≤ 0.2 µm. The quality-assurance procedures used for samples filtered through the 0.45-µm nominal-pore-size capsule, plate, or other filtration equipment also are required for the ≤ 0.2-µm filters. If concentrations of target analytes are analyzed at sub-parts-per-billion levels, more stringent QA/QC measures are needed. Such samples can be filtered through a plate filter or other filtration equipment (for example, a 47-mm-diameter vacuum-filter unit) as long as the equipment used is approved by the study or program, data-quality requirements are met, and additional quality-control samples are collected. For additional information on filtration artifacts, procedures, and equipment, see Kennedy and others (1976), Salonen (1979), McCarthy (1988), McCarthy and Zachara (1989), Puls and Barcelona (1989), Ward and Harr (1990), Horowitz and others (1992, 1994), Williams and others (1993), Robards and others (1994), and Koterba and others (1995).

Cleaning and conditioning of various filter media used for inorganic constituents are summarized in table 5-3. Contamination during sample filtration can be reduced by following the instructions given for cleaning, conditioning, and handling of the filter media.

Table 5-3. Field cleaning and conditioning procedures for media used to filter samples for inorganic-constituent analysis

[µm, micrometer; mL, milliliter; sample, the water to be sampled; µg/L, microgram per liter; mm, millimeter; HNO_3, 1 molar solution of ultrapure-grade nitric acid; HCl, 1 molar solution of ultrapure-grade hydrochloric acid; nutrients, nitrogen and phosphorus species; DIW, District- or laboratory-produced deionized water of known quality, ASTM Type-1 grade or better; IBW, laboratory-produced inorganic-grade blank water; *N*, normal; >, greater than]

Description	Filter media	Field cleaning/ conditioning	Application
Disposable capsule filter[1] (Polypropylene)	Polysulfone, pleated membrane, 0.45-µm or 0.2-µm pore size	Clean with 1,000 mL DIW and remove residual DIW[2] Condition with 25 mL sample	Major ions and nutrients; trace elements with concentrations > 1 µg/L; radio-chemicals and isotopes
Plate filter — 142 mm (Polycarbonate or acrylic)	Cellulose nitrate, tortuous path (0.45 and 0.1 µm are most commonly used pore sizes)	Clean with 500 mL DIW and extract residual DIW Condition with 100 mL sample	Major ions and nutrients; trace elements if concentrations > about 100 µg/L
Cartridge or hand-pressure filter assembly—47 mm (Polypropylene or fluorocarbon polymer)	Cellulose nitrate, tortuous path (0.45, 0.2, and 0.1 µm are most commonly used pore sizes)	Clean with 100 mL DIW and remove residual DIW Condition with 20 mL IBW or 10 mL sample	Major ions and nutrients; trace elements with concentrations at about 1 µg/L or greater
Cartridge or hand-pressure filter assembly—47 mm (Fluorocarbon polymer)	Polycarbonate (such as Nuclepore), direct path (0.40 and 0.1 µm are most commonly used pore sizes)	Soak in HNO_3 rinse with IBW.[3] Remove residual IBW Condition with 20 mL IBW or 10 mL sample	Major ions and nutrients; trace elements with concentrations at about 1 µg/L or greater

[1]Example: Gelman Sciences 12175 (0.45 µm); 600 square-centimeter filtration area. Other disposable capsule filters are available that have different effective filtration area, media type, and media pore size.

[2]For trace-metal analyses at nanogram-per-liter concentration levels, first acid rinse with 500 mL of 1-*N* HCl (polysulfone membranes cannot withstand HNO_3).

[3]Substitute HCI for HNO_3 if sampling includes nutrients.

- Before filtering, designate one member of the processing team as Clean Hands (CH) and another member as Dirty Hands (DH) if using the CH/DH method (NFM 4).
- Wear appropriate, disposable, powderless gloves throughout the process. Vinyl gloves are adequate for inorganic-constituent sampling.
- Filter the samples within a processing chamber to minimize the possibility of contamination.

5.2.1.A Capsule-Filter Procedure

The capsule filter is a disposable, self-contained unit composed of a pleated filter medium encased in a plastic housing that can be connected in-line to a sample-delivery system (such as a submersible or peristaltic pump) that generates sufficient pressure (positive or negative) to force water through the filter. Filter media are available in several other pore sizes, but 0.45 µm is the pore size used routinely for most studies at this time. The capsule filter is required for most studies when filtering samples for trace-element analysis and is recommended when filtering samples for major-ion or other inorganic-constituent analyses.

The following instructions implement Clean Hands/Dirty Hands (CH/DH) techniques and the other QA procedures that are required for trace-element samples with analyte concentrations at the parts-per-billion (ppb) level and that are recommended as good field practice for all samples.

- The DH team member performs operations that are outside of the processing chamber and the CH team member performs operations inside the chamber. DH and CH must wear appropriate disposable, powderless gloves (gloves).
- Preclean capsule filters (step 5 below) before leaving for the field to save field time.

Fill bottles for filtered samples in this sequence: FA (trace elements) ➜ FAM (mercury) ➜ FA and FU (major ions) ➜ FCC or FCA (nutrients) ➜ FAR and all other samples.

To prepare the work space, sample bottles, and capsule filter:

1. CH/DH: Put on one or several layers of gloves.
2. *CH*: Assemble processing chamber, attach chamber cover, and change gloves. Place capsule filter and sample bottles into chamber, and run discharge end of peristaltic pump tubing into the chamber. Open DIW[7] container and cover it with a plastic bag to prevent contamination from airborne particulates.
3. *CH/DH*: (*CH*) Insert intake end of peristaltic pump tubing through the plastic covering and into a l-L container of DIW.
   a. (*DH*): Attach tubing to peristaltic pump head and pump DIW to fill tubing.
   b. Discharge waste rinse water through a sink funnel or a toss (waste) bottle.
4. Discard DIW stored in DIW-prerinsed sample bottles. If sample bottles were not DIW-prerinsed by field personnel:
   a. Wearing gloves, rinse off exterior of each bottle.
   b. Pour DIW into bottle until about one-tenth full.
   c. Cap bottle and shake vigorously about five times.
   d. Uncap and empty bottle.
   e. Repeat b–d of step 4 twice (for a total of three times).
   f. Recap bottles until ready to field rinse.

[7]Office of Water Quality Technical Memorandum 92.01 describes the quality required of the deionized water.

5. **Clean the capsule filter.** If the capsule filter was precleaned, go to the sections that follow on “To filter a composite sample” or “To filter a pumped sample,” as appropriate. The steps below comprise sufficient precleaning of the filter for inorganic analytes at the parts-per-billion (ppb) concentration level. More rigorous precleaning procedures that include rinsing with trace-metal-grade hydrochloric acid are required for samples containing ppb concentrations of target analytes (table 5-3). **Only CH touches those portions of tubing that will be in direct contact with the DIW or capsule filter.**
   a. *CH*: In the processing chamber, remove capsule filter from protective bags.
      - Attach pump tubing to inlet connector of capsule filter, keeping tubing as short as possible. **Make sure direction of flow through capsule filter matches the direction-of-flow arrow on the side of the capsule.**
      - To help minimize aeration of the sample (usually for ground-water samples), secure a short length of clean fluorocarbon polymer tubing onto capsule filter outlet to extend into the sample bottle so the bottle can be filled from the bottom up.
   b. *CH/DH*: Pump 1 L of DIW through capsule filter; discharge waste rinse water through a sink funnel or to a toss bottle.
      - *DH* operates the pump at a low speed.
      - *CH* inverts the capsule filter so the arrow on the housing is pointing up. (This expels trapped air from the capsule during initial filling; do not allow water to spray onto the chamber walls.)
   c. *DH*: Remove tubing from DIW reservoir and continue to operate pump in forward mid-range speed position to drain as much of the DIW that remains in the capsule filter as possible. While pump is operating, shake capsule filter to help remove any entrained DIW.
   d. *CH*: Detach capsule filter from peristaltic pump tubing, put it into a clean, sealable plastic bag, and place in a corner of the processing chamber until ready for use.

Filtration procedures differ somewhat, depending on how the sample is collected. If the sample is collected using discrete collection equipment, such as the surface-water bag or bottle sampler or ground-water bailer, use the procedures described below in "To filter a composite sample." If the sample is collected by pumping it directly from the source, use the procedures described below in "To filter a pumped sample." Ground-water samples usually are not collected as a composite. If samples are to be withdrawn from

a well using a bailer, consider using a bailer to which the capsule filter or other filtration device can be connected inline to the bailer bottom-emptying device. Pouring a sample from the top of the bailer into another receptacle aerates the sample and therefore is not a generally recommended procedure for processing ground-water samples.

To filter a composite sample (generally for surface water):

1. Field rinse peristaltic pump tubing with the water to be sampled.
   a. *CH:* Rinse the outside of each end of the peristaltic pump tubing.
   b. *CH*: Transfer intake end of peristaltic pump tubing into composite sample. If a churn splitter is used, transfer intake end of peristaltic pump tubing through churn funnel and reseal plastic bag around the tubing.
   c. *DH*: Start peristaltic pump to slowly pump sufficient sample to completely fill pump tubing.
   d. *CH*: Discard rinse water through the sink funnel or into a toss bottle or other receptacle and dispose of appropriately. Prevent water from ponding in the processing chamber.
   e. *DH*: Stop peristaltic pump after tubing is field rinsed.
2. Field rinse capsule filter:
   a. *CH*: Remove cleaned capsule filter from plastic bag and attach discharge end of the peristaltic pump tubing to the inlet connector on the capsule filter.
      - A clean, small plastic hose clamp may be used to secure the discharge end of the tubing to the capsule filter inlet connector.
      - Check that the direction of sample flow through the capsule filter matches the direction of the arrow on the capsule.
   b. *DH:* Operating the pump at low speed, pump sample through the tubing to the capsule filter.
   c. *CH:* Turn capsule filter so that the outlet is pointing up (arrow on capsule housing is pointing up) and flow of the sample forces trapped air out of the capsule filter while it is filling. **Do not let sample spray onto chamber cover.**
      - The chamber cover must be changed if sample has sprayed onto it.
      - If some water that sprayed onto the chamber cover has dripped into the sample bottle, discard the bottle, change the cover, and collect a new sample.

d. *DH:* Stop the peristaltic pump as soon as the capsule filter is full of sample and all air in the capsule filter has been expelled.

> TECHNICAL NOTE: The goal is to minimize clogging the filter medium with suspended materials by minimizing the volume of sample that will be used to field-rinse the filter.

1. Collect sample filtrate.
   a. *CH*: Check that there is a tight connection between the pump tubing and the capsule filter.

      DH: Check that the intake tube is properly inserted in the sample and start the pump.

      CH: Collect a maximum of 25 mL of the water to be sampled as it discharges through the filter. **Do not exceed 25 mL**.

      CH: Field rinse a precleaned 250-mL FA bottle for trace-element sample only with sample filtrate.

      DH: Stop the pump in time to prevent losing filtrate to waste.

      CH: Cap bottle, shake vigorously, and then discard rinse water into appropriate receptacle.

   b. *DH:* Start pump and resume flow from pump to the filter.

      CH: **Filter only the next 200 mL of the sample** into the trace-element FA bottle (fill to top of upper lip of standard 250-mL polyethylene bottle). Cap bottle securely and set aside for chemical treatment.

   c. *DH:* Stop the pump after the trace-element FA bottle is filled.

   d. If a filtered mercury sample is required, restart pump and repeat steps 3a–c, substituting a FAM bottle for the FA bottle.

   e. *CH:* Field rinse any remaining sample bottles for inorganic analyses. **Use no more than a total of 100 mL of filtrate per capsule filter to field rinse any remaining bottles for filtered sample.**

   f. Fill remaining bottles in the following order: (1) major cations, (2) nutrients and major anions (including alkalinity), (3) radiochemicals (Appendix A5-A), and (4) stable isotopes. Cap each bottle immediately after filling.

To filter a pumped sample (usually ground water):

Ground-water samples usually are withdrawn from a well by means of a submersible pump. Note that this method might be appropriate for some surface-water samples. The capsule filter or other filter assembly is connected inline with the sample tubing in order to collect samples directly from the well.

- When sampling ground water, DH should check that the turbidity values recorded at the end of purging have remained stable. Equipment changes or adjustments that disrupt sample flow can affect sample turbidity and should be avoided. If sample flow is disrupted, pump for several minutes until ambient turbidity values are reestablished.
- **Maintain a smooth, uniform flow.** Do not stop pump or divert flow from capsule filter or other filter assembly during bottle field rinse or filtration, if possible.

  TECHNICAL NOTE: If using a three-way valve, changing the setting to divert the flow of sample being pumped to the filter with a submersible pump can cause air bubbles to form, can air-block the filtration equipment, and can cause changes in pumping rate that could result in increased turbidity. These effects should be avoided to preserve sample integrity; therefore, flow to the filter should not be stopped until all filtration is complete.

1. Field rinse the capsule filter with sample water:
   a. *CH:* Ensure that the sample line is full of sample and free of bubbles; then attach the discharge end of the sample line to the inlet connector on the capsule filter.
      - Practice your technique for attaching the capsule filter to the tubing carrying flowing water so that water does not spray onto chamber walls.
      - Check that the direction of flow matches the direction of the arrow on the capsule.
   b. *DH:* Adjust the sample flow through the sample line to the capsule filter, keeping a slow rate of flow.
   c. *CH*: Turn the capsule filter so the outlet is pointing up (arrow on capsule housing is pointing up) and the flow of sample forces trapped air out while the capsule filter is filling.
      - Do not allow water to spray onto chamber walls.
      - The capsule filter should be full of sample. No air should be left in the capsule filter.

d. Field rinse bottles for inorganic-constituent filtered samples with sample filtrate (section 5.0.3). Use bottles that were already rinsed three times with DIW. Determine whether the potential clogging of pores in the filter medium is of concern for your samples (see TECHNICAL NOTE below).

CH: Fill a 250-mL FA bottle for trace elements with 25 mL of sample filtrate; cap, shake vigorously, and discard rinse water into appropriate receptacle.

CH: Fill a FA bottle for trace elements with about 200 mL of sample filtrate (to top of upper lip of 250 mL bottle). Cap bottle and set aside for chemical treatment.

CH: If a mercury sample is required, field rinse and fill a FAM bottle using the same procedure as for the 250-mL FA bottle.

CH: Field rinse remaining bottles, trying to use no more than an additional 100 mL of sample filtrate.

> TECHNICAL NOTE: Depending on sample turbidity and composition, the nominal pore size of filter media tends to decrease as the volume of sample passed through the filter increases because pores are clogged by sediment loading or mineral precipitation on the filter (Horowitz and others, 1994). Ground water with turbidity ≤5 NTU should not affect filter pore size appreciably. To minimize the chance of filter clogging, limit the volume of sample passed through the filter by eliminating the field rinse—be sure that you use clean bottles and fill them one after the other. For ground-water sampling, do not stop the pump during the field-rinse and sampling process.

e. *CH:* Collect sample filtrate immediately into any remaining bottles in the following sequence (flow rate should be slow enough to avoid splashing sample out of the bottle): (1) major cations, (2) major anions and nutrients (including alkalinity sample for field titration), (3) radiochemicals (check Appendix A5-A for bottle-rinse and filtration requirements), (4) stable isotopes.

f. *CH*: Cap each bottle immediately.

Rinse FA, FU, FAM, FCA, and FCC bottles with filtered sample—not with raw sample.

After collecting filtered samples:

1. *CH*: If samples require chemical treatment, place FA bottles in the preservation chamber and go to section 5.4.
2. For filtered samples that do not require chemical treatment:
   a. *CH*: Set samples outside processing chamber.
   b. *DH*: Check that information on the bottle label is correct and complete.
   c. *DH:* Pack samples that require chilling in ice or refrigerate immediately.
   d. *DH:* Pack remaining samples for shipping (section 5.5).
3. Rinse all reusable equipment with DIW immediately—before equipment dries.
   - *CH*: If equipment will be reused at another site before returning to the office, rinse immediately with DIW and field clean tubing and other sample-wetted parts of the equipment using the prescribed cleaning procedures (NFM 3).
   - *CH*: If equipment or tubing will not be reused before returning to the office, rinse immediately with DIW and store rinsed tubing and equipment in plastic bags for office or laboratory cleaning.
4. **Discard the capsule filter after filtering each sample—do not reuse.**
5. Document the filtration procedures used on field forms and in field notes.

Use of the 0.45-µm disposable capsule filter for trace-element samples is required for many USGS programs.

5.2.1.B Plate-Filter Procedure

The filtering procedure using a 142-mm-diameter plastic plate-filter assembly is described below. The procedure remains basically the same for plate-filter assemblies of different diameters.

Prepare and precondition plate-filter assembly:

The following instructions pertain to either a 142-mm-diameter or a 47-mm-diameter plastic plate-filter assembly and require that the assembly components have been rigorously cleaned (NFM 3). To avoid recleaning in the field, prepare a set of filtration equipment for each well or surface-water sampling station. (Ignore Step 3 below if plate-filter assembly has been rinsed in the office.)

1. *CH*: Put on gloves. In a processing chamber, open a clean plate-filter assembly and load with the filter.
   a. Using nonmetallic forceps, place the bottom retaining screen on the base of the filter assembly. **Do not interchange bottom and top retaining screens.**
   b. Place the filter on top of bottom retaining screen using clean, blunt plastic or ceramic forceps. Do not touch the filter with hands (gloved or ungloved).
      - Be sure that only one filter is transferred from its original container directly to the plate of the filter assembly. Take care not to transfer the paper liner that separates each filter.
      - The filter should never be removed from the original container until each is transferred to the plate-filter assembly for use. (Exception: polycarbonate (Nuclepore) filter medium is precleaned with acid solution. If transferring one of these, hold the filter with forceps and rinse off acid with inorganic blank water (IBW) dispensed from wash bottle.)
   c. Using forceps, place the top retaining screen on top of the filter.

      TECHNICAL NOTE: If filtering sediment-laden water, a prefilter can be placed between the filter and the top retaining screen.

   d. Dispense 10 to 20 mL of DIW from a wash bottle onto the filter.

e. Close the plate-filter assembly by aligning the top and bottom plates and lightly tightening the plastic bolts, followed by finger tightening opposite pairs of bolts. **Overtightening can cause the plate-filter assembly to warp and leak.** Check that O-rings are in place before closing the assembly. Change gloves.

2. *DH/CH*: Pass the discharge end of the pump tubing through the hole in the side or top of the processing chamber. **Only the CH team member touches sections of tubing that will be in direct contact with the plate-filter assembly.**
   - Keep tubing as short as practical.
   - Attach a short piece of clean tubing to outlet connector of plate-filter assembly.
3. *DH/CH*: Rinse the plate-filter assembly with DIW, using a peristaltic pump, as follows (**rinsing must be repeated each time a clogged filter is replaced with a new filter**):
   a. *CH/DH*: Place intake end of peristaltic pump tubing into a 500-mL container of DIW. Turn pump on low speed.
   b. *CH*: Open the air-vent valve on top of the plate-filter assembly. Tilt the filter assembly slightly to the side and squeeze the outlet tube closed to force trapped air out through the vent. Release the outlet tube. (Venting trapped air is necessary because air bubbles will reduce the effective filtering area by preventing sample from passing through the filter.)
   c. *CH*: Close valve when top is filled with sample.
   d. *CH*: Pump sample through the plate-filter assembly and discard this field-rinse water through the sink funnel or into the toss bottle to prevent the water from ponding in the bottom of the processing chamber.
   e. *CH/DH*: Remove intake end of the pump tubing from the DIW container and continue to pump, draining as much of the remaining DIW from the plate-filter assembly as possible.
4. If using a peristaltic pump to transfer the sample to the processing chamber (go to step 5 if sample delivery is with a submersible ground-water pump):
   a. *CH*: Rinse intake end of the peristaltic pump tubing with the water to be sampled.
   b. *CH*: Transfer intake end of the peristaltic pump tubing into the container of sample. If a churn splitter is used, transfer the intake end through the churn funnel and reseal the plastic bag around the tubing.

c. *CH*: Remove peristaltic pump tubing from the inlet connector of the plate-filter assembly and hold the end of the tubing over the sink funnel or toss bottle.

d. *DH/CH*: Start the peristaltic pump in the forward position at slow speed and pump sufficient sample to fill and rinse all pump tubing. Stop the pump after the tubing is rinsed.

5. *CH*: Attach the discharge end of the peristaltic-pump or submersible pump tubing to the inlet connector of the plate-filter assembly.
   - Keep tubing as short as practical.
   - A clean, small, plastic hose clamp can be used to secure the discharge tubing to the inlet connector.
6. *DH*: Start sample flow to the plate-filter assembly.
7. *CH*: Vent trapped air and rinse plate-filter assembly as instructed in steps 3 b–d above.
   - If using a peristaltic pump, turn pump on low speed.
   - If using a submersible pump, maintain a slow and steady flow rate.
8. *CH*: Rinse appropriate sample bottles once with filtrate. Filter no more than 100 mL of sample for the final rinse of all sample bottles that require rinsing.
9. Filter samples, filling bottles in the following order, as applicable to study objectives and sample designation:

   a. Trace elements

   > TECHNICAL NOTE: Study objectives and data-quality requirements govern procedures to be used if the filtered trace-element sample is to reflect concentrations of analytes in true solution (the dissolved fraction). Such interpretive studies of ground-water or surface-water chemistry commonly use ≤0.1-µm filter media and plate-filter assembly or a tangential flow method of phase separation. Note that any deviation from the standard procedure for collecting filtered trace-element samples through the 0.45-µm capsule filter must be documented and reported with the analytical results.

   b. Major cations

   c. Nutrients, major anions, and alkalinity sample

   d. Radiochemicals

   e. Isotopes

10. *CH*: If the filter medium clogs before the needed volume of water is filtered, carefully remove the filter and replace with a new filter. Repeat steps 1 through 7. Cap each bottle immediately after filling.
11. **If samples require chemical treatment ⇨Go to section 5.4.**
12. *DH*: After filtration,
    a. Check that information on the bottle label is complete and set the samples aside for shipping (section 5.5). Samples that must be chilled need to be refrigerated or packed in ice as quickly as possible and maintained at 4°C without freezing.
    b. Disconnect and disassemble the plate-filter assembly. **Discard the used filter.**
    c. Rinse all equipment with DIW immediately after use and before it dries. Equipment that has dried after sampling without being rinsed or cleaned needs to be cleaned vigorously with a detergent and rinsed with DIW before the next use. Nonmetallic equipment must also be acid rinsed.
    d. Put rinsed tubing in a plastic bag for cleaning at the office laboratory.
    e. If equipment is to be used at the next site, field clean all the equipment using the procedures described in NFM 3. Field cleaning between sampling sites is carried out while still at the sampling site.
13. Document on field forms and in field notes any modifications to the filtration procedures used.

ORGANIC COMPOUNDS 5.2.2

Standard procedure for phase separation of general trace-organic compounds involves the use of a stainless steel or aluminum 142- (or 293-) mm-diameter plate-filter assembly with glass-fiber filter media and a valveless piston or fluorocarbon polymer diaphragm-head metering pump (section 5.2.2.A). Equipment and procedures differ when filtering samples for dissolved and suspended organic carbon (section 5.2.2.C) and optionally for organonitrogen herbicide analyses (section 5.2.2.B). Required conditioning for filter media is discussed below and summarized in table 5-4.

Table 5-4. Field conditioning requirements for media used to filter samples for organic-compound analysis

[mm, millimeter; mL, milliliter; PBW, pesticide-grade blank water; sample, the water to be sampled; methanol, pesticide-grade methanol; DIW, deionized water]

Filtration equipment *Application*	**Construction materials**	**Filter media**	**Filter cleaning and conditioning**[1]
Plate-filter assemblies: 142 or 293 mm *General trace organic compounds*	Stainless steel or aluminum	Glass-fiber filter[2]	Wet with PBW: 10-20 mL (142 mm) or 50-75 mL (293 mm) Condition with 100-125 mL sample
Disposable capsule filter: 25 mm *Organonitrogen herbicides*	Polypropylene	Nylon	Rinse with 10 mL of methanol No conditioning
Pressure filter apparatus: 47 mm *Dissolved and suspended organic carbon*	Stainless steel or fluorocarbon polymer	Silver metal	Rinse with 100 mL PBW or District-prepared organic-grade DIW Condition with 10-15 mL sample

[1]Do not reuse filters.

[2]Use only glass-fiber filters that have been adequately baked.

The procedures for filtering samples for analysis of trace-organic compounds, including volatile organic compounds, pesticides, and base-neutral compounds, are summarized from Sandstrom (1995). CH/DH techniques and associated QA procedures for inorganic analytes with parts-per-billion concentrations are not required for organic analytes but are recommended as good field practices to maintain the integrity of sample chemistry. Field personnel must wear disposable, powderless gloves (gloves). These gloves must be able to withstand any solvents or other chemicals that will be used during sample processing and equipment cleaning. Equipment and supplies used to filter different types of organic compounds are described in NFM 2. Additional information about organic-compound filtration can be found in Ward and Harr (1990), Manning and others (1994), Shelton (1994), and Koterba and others (1995).

Plate-Filter Procedure 5.2.2.A

Read through the procedures described in Sandstrom (1995) and presented in tables 5-4 and 5-5 and in figure 5-1. Obtain the equipment needed (table 5-5), test equipment operation, and collect an equipment blank if needed. Filtering samples for organic-compound analysis inside a processing chamber and using Clean Hands (CH)/Dirty Hands (DH) techniques is not mandatory but is recommended.

Table 5-5. Equipment for filtration of water-sediment samples for determination of organic compounds

[Modified from Sandstrom (1995); FEP, fluorinated ethylene-propylene; mm, millimeter; mL/min, milliliter per minute; L, liter; µm, micrometer; °C, degree Celsius]

Item	Description of equipment
	Container for unfiltered sample. Clean, laboratory-grade glass bottles with fluorocarbon polymer-FEP-lined lids.
	Fluorocarbon polymer-FEP tubing, 6.35-mm outside diameter.
	Union, 6.35-mm tube (Swagelok Company, Solon, Ohio, No. SS-400-6 or equivalent).
	Fluorocarbon polymer-FEP convoluted tubing, 6.35-mm outside diameter (Cole-Parmer Instrument Company, Chicago, Ill., No. L-06486-02 or equivalent).
	Tube fitting, 6.35-mm diameter tube to 6.35-mm diameter pipe thread (Swagelok Company, Solon, Ohio, No. SS-400-1-4 or equivalent).
	Pump, ceramic-piston, valveless, with 12-volt direct current motor, capable of pumping from 0 to 500 mL/min (Fluid Metering, Inc., Oyster Bay, N.Y., Model QB-1 CSC or equivalent).
	Battery, 12-volt direct current.
	Tube fitting, 6.35-mm diameter tube to 9.53-mm diameter pipe thread (Swagelok Company, Solon, Ohio, No. SS-400-1-6 or equivalent).
	In-line plate-filter assembly, aluminum (or stainless steel), 142-mm diameter (Geotech Environmental Equipment Inc., Denver, Colo., No. 0860 or equivalent).
	Glass-microfiber filter media, binder-free, 142-mm diameter, 0.7-µm nominal pore size (Whatman Inc., Clifton, N.J., GF/F grade, No. 1825C142 or equivalent). Note: The filters must be baked at 400°C for at least 2 hours and kept wrapped in aluminum foil before use.
	Bottle for filtered samples, amber borosilicate glass, 1 L with fluorocarbon polymer-FEP-lined cap.
	Fluorocarbon polymer-FEP squeeze (wash) bottle for organic-grade blank water.
	Stainless-steel forceps for handling the filters.

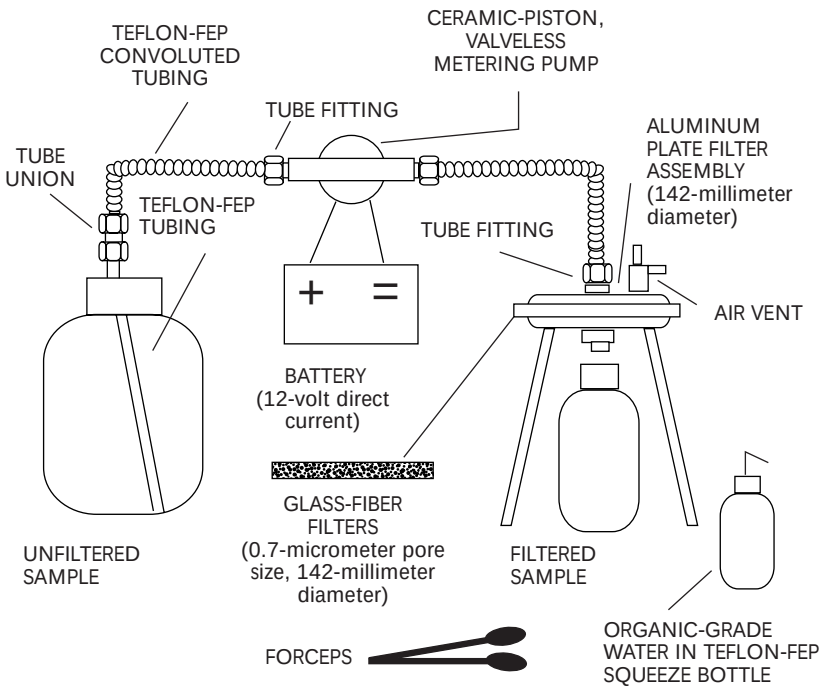

Figure 5–1. An equipment system suitable for filtering samples for analysis of organic compounds (from Sandstrom, 1995).

To filter sample for analysis of general trace-organic compounds in solution:

1. *CH/DH*: Wear appropriate (latex or nitrile) gloves throughout sample processing. Change gloves after setting up equipment. (Wearing several layers of gloves can save time.)
2. *CH*: Load the filter onto the plate-filter assembly within the processing chamber.
   a. Open precleaned plate-filter assembly.
   b. Place one stainless steel support screen on the base of the plate-filter assembly—Use stainless steel forceps.
   c. Place one clean 0.7-µm pore-size glass microfiber filter on top of the screen. **Do not touch the filter with fingers; use stainless steel forceps.**
   d. Wet the filter with a few drops of pesticide-grade blank water (PBW) from a fluorocarbon polymer wash bottle to help keep the filter in place as the unit is assembled.

e. Close plate-filter assembly—Align top and bottom plates. **Lightly tighten** the locking bolts or locking ring. Attach a short length of fluorocarbon polymer tubing to the outlet of the plate-filter assembly to channel filtrate to a toss bottle, sink funnel, or drain.

f. Add 10 to 20 mL of PBW rinse water through the inlet in the upper plate to wet the filter completely before tightening the clamps. (This rinse also helps prevent damage to the filter: a dry filter might rupture when the plate-filter assembly is tightened.)

g. Tighten the locking bolts or ring by hand. **Overtightening can cause the plate-filter assembly to warp and leak and the filter to rupture.**

3. *CH/DH*: Rinse the pump tubing (from a metering pump) or the sample tubing (from a submersible ground-water pump) with the water to be sampled. Discard rinse water into a sink funnel or toss bottle.

4. Set up the pump for filtration.

- *CH*: If using a metering pump, place intake end of tubing into the container holding the sample. Attach discharge end of pump tubing to the inlet connector of the plate-filter assembly. Use a stainless steel compression fitting of the appropriate size to secure the discharge hose to the inlet connector.
- *CH*: If using a submersible pump, attach discharge end of the sample tubing from the pump to the plate-filter assembly, keeping tubing as short as practical. Use a stainless steel compression fitting of the appropriate size to secure the discharge hose to the inlet connector.

5. *CH*: Rinse and condition the filter. The total volume of sample passed through the filter, including rinse water, needs to be accurately determined to ±1 mL and recorded in the field notes.

a. Turn on the metering pump at low speed or open the sample tubing from the submersible pump and operate at a low flow rate.

b. Open the air-vent valve located on top of the plate-filter assembly. Tilt the assembly slightly to the side to allow all trapped air to escape (vent).

c. Close the air-vent valve when water discharges through the valve.

d. Pass 100 mL of sample through the filter to remove any residual liquids from the cleaning or prewetting procedures. If concentration of organic compounds in suspended-material phase is to be determined:

   i. Capture the rinse water in a dry, clean, graduated cylinder.

   ii. Measure and record the actual volume of sample passed through the filter.

e. Discard rinse water to a sink funnel or toss bottle.

6. *DH*: Tare the weight of a clean, baked, glass sample bottle. (First check to see if this is required for the analytical procedures to be used.)

   a. Set up, level, zero, and check the accuracy of the balance with a reference weight. Record accuracy in field notes.

   b. Tare the weight of a dry, clean, capped 1-L amber bottle, and record the weight. Remove the bottle cap.

7. Filter and weigh each sample. (Do not field rinse baked, glass sample bottles.)

   a. *CH*: Resume the flow of sample through the plate-filter assembly.

   b. *CH*: Place the appropriate sample bottle under the outlet of the plate-filter assembly.

   c. *CH*: Collect approximately 1 L of filtered sample for each analytical schedule, but leave headspace in each bottle. If the filter medium becomes too clogged to proceed, go to step 13 below.

   d. *DH*: Cap the bottle(s) and pass sample(s) out of chamber. Wipe the bottle dry with a lint-free laboratory tissue, such as Kimwipe™, to remove any condensation from the outside of the sample bottle.

   e. *DH*: Weigh and record the amount of sample filtered (total weight minus tare weight of bottle).

   f. Chill samples immediately and maintain at or below 4°C without freezing for shipment to the laboratory (section 5.5).

8. *CH*: Remove as much water as possible from the inside of the plate-filter assembly by using the metering pump to pump air through the sample tubing, or by pulling water out through the outlet nozzle with a peristaltic pump, or by using a syringe to apply positive air pressure to the inlet connector. This removes any residual sample and prevents spilling the water-sediment slurry when the plate-filter assembly is disassembled.
9. *CH*: If sediment collected on the filter is to be analyzed for organic compounds:
   a. Carefully disassemble the top of the plate-filter assembly.
   b. Using metal forceps, carefully fold the filter in half and then in half again (quarters).
   c. Transfer the filter to a baked, wide-mouth glass jar with a fluorocarbon-polymer-lined cap.
   d. Record on the jar label and on field forms the total volume of sample that passed through the filter.
   e. Chill and maintain the sediment sample at or below 4°C for shipment to the laboratory (section 5.5)
10. *DH/CH*: If sediment on the filter will not be analyzed, disassemble the top of the plate-filter assembly and remove the filter with forceps. Discard the filter appropriately. Rinse the plate-filter assembly components and tubing immediately after the filter has been removed.
11. *DH/CH*: **If the equipment is to be used at a subsequent site, field clean all equipment while equipment is still wet and before going to the next site.** Clean with detergent solution, rinse with DIW, and final rinse with methanol—do not use methanol on equipment used for TOC, DOC, or SOC samples (NFM 3). If the plate-filter assembly will not be reused before returning to the office, rinse all components with DIW. Put rinsed components and tubing in a resealable bag for cleaning at the office laboratory.
12. Document on field forms and in field notes the filtration procedures used.

13. **If the filter medium becomes clogged before the required volume of sample has been collected,** stop the metering pump or divert the sample flow from the submersible pump (see TECHNICAL NOTE below) and replace the filter with a new filter as indicated in steps a through f below.

> TECHNICAL NOTE: Diverting the flow of sample being pumped with a submersible pump by use of a three-way valve can result in a temporary increase in turbidity (NFM 4). Allow turbidity to clear after reestablishing flow through the sample tubing and to the plate-filter assembly.

a. Remove as much water as possible from inside the plate-filter assembly. The stainless-steel or aluminum plate-filter assembly does not have an upper support screen, so the filter cannot be backflushed. Remove the inlet tubing to the metering pump from the sample and either attach tubing from a peristaltic pump to the outlet and pull residual water out, or use a syringe to apply positive air pressure to the inlet connector.

b. Remove the clogged filter with forceps. **If sediment collected on a filter is to be analyzed for organic compounds, follow directions in step 9**.

c. Load the plate-filter assembly with a new filter and reassemble the unit as described in step 2.

d. Prepare the filter as described in steps 2f and 5a–d, allowing the first 125 mL of sample to remove any sediment particles that may have moved below the filter during the replacement procedure. Use a graduated cylinder to measure volume.

e. Record the volume of sample rinsed through the plate-filter assembly if sediment collected on the filter is to be analyzed for organic compounds. Volume accuracy should be ± 1 mL.

f. Place a tared sample bottle under the plate-filter assembly outlet, resume the flow of sample through the filter, and continue to collect the sample filtrate.

Capsule-Filter Procedure for Processing Samples for Analysis of Organonitrogen Herbicides (Optional) 5.2.2.B

The capsule-filter procedure for filtering samples for organonitrogen-herbicide analysis described below is provided if the option to process these samples onsite is selected. The steps that follow are taken from Sandstrom (1995), which includes more detailed instructions and description of the equipment, including the 25-mm-diameter disposable nylon-media filter capsule (nylon filter):

1. Before leaving for the field site, clean the nylon filter.
   a. Put on appropriate, disposable, powderless gloves (gloves).
   b. Place intake end of the metering pump tubing into the methanol.
   c. Pump about 10 mL through the nylon filter to a used-methanol disposal container.

CAUTION: Do the following if using methanol or other organic solvent:

- **Work under a fume hood or in a well-ventilated area, NOT in the field vehicle.**
- **Wear protection against skin and eye contact and do not inhale fumes.**
- **Collect methanol rinse waste into proper disposal containers and dispose of according to local regulations.**

2. At the field site, cover the field bench or table with a sheet of aluminum foil or Teflon™ to prepare a clean work surface.
3. Place equipment and supplies on the clean work surface. Remove foil or other wrapping from precleaned equipment. Change gloves.
4. Remove the nylon filter from the plastic bag. Rinse the discharge end of the pump tubing with methanol. Discard used methanol to a proper waste container. Attach the metering-pump tubing to the capsule inlet; keep tubing as short as possible.
5. If filtering with a metering pump, transfer the intake end of the pump tubing to the sample. If using a submersible pump to collect the ground-water sample, redirect the sample flow to and from the nylon filter as needed, using a manifold flow-valve system.
6. Purge air from the sample tubing. Before connecting the nylon filter, allow ground-water sample to flow through the tubing at a very low rate. This will require just a few milliliters of sample if a metering pump is used. With sample flowing, connect tubing to the nylon filter. (Use a Luer™ connector of appropriate size to secure the discharge hose to the inlet connector.)
7. Collect at least 100 mL of filtrate in a 125-mL baked amber glass sample bottle. Do not completely fill the bottle. Allow 2–3 cm of headspace. The headspace leaves space for matrix spike standards to be added (if required) and prevents sample loss if the sample freezes.
8. If the nylon filter medium becomes clogged before a sufficient amount of sample has been filtered, replace it with a new nylon filter and repeat steps 6 and 7 until at least 100 mL have been collected.
9. When filtering is complete, cap the bottle firmly. Chill and maintain the sample at or below 4°C without freezing during storage and shipment to the laboratory (section 5.5).
10. Discard the nylon filter. Field clean the pump and tubing as described in NFM 3 before using the equipment at the next site.
11. Document on field forms and in field notes the filtration procedures used.

Procedures for Processing Samples for Carbon Analysis 5.2.2.C

Standard methods are described in this section for processing a sample for analysis of (1) total particulate carbon (TPC), particulate inorganic carbon (PIC), and particulate organic carbon (POC)[1]; and (2) dissolved organic carbon (DOC). The specific method to be used depends on the target analyte and the choice of filter type and filtration equipment, which are to be documented on field forms and in field notes.

- **TPC (Total Particulate Carbon), PIC (Particulate Inorganic Carbon), and POC (Particulate Organic Carbon).** Filtration of the sample requires a 25-mm glass-microfiber filter (see *UPDATE* below). Particulate organic carbon is determined by subtracting the laboratory-analyzed concentrations of particulate inorganic carbon from total particulate carbon; that is, POC = TPC - PIC.
- **DOC (Dissolved Organic Carbon).** Filtration of the sample requires either a disposable capsule unit with a polysulfone pleated filter or a 25-mm glass-microfiber filter (GF/F) (see *UPDATE* below).

> ***UPDATE:*** The NFM-5/99 version of this section (5.2.2.C) entitled "Gas-Pressurized Filter Procedures for Processing Samples for Analysis of Dissolved and Suspended Organic Carbon," which was based on a field method using silver filters, has been moved to Appendix A5-D. That method is no longer used in USGS studies as a standard procedure because of the decreasing availability of the silver filters (Office of Water Quality Technical Memorandum 2000.08).

[1]POC, determined by a calculation, is distinguished from the suspended organic carbon (SOC) analysis, which is determined by direct analysis of organic carbon residue on a silver filter. USEPA method 440.0 is used for laboratory analysis of the TPC and PIC samples and also provides direct determination of total particulate nitrogen (TPN) concentration.

Equipment and equipment-cleaning procedures

The equipment needed to process samples for analysis of TPC and PIC depends on whether the pressure-filtration method (table 5-6a) or the vacuum-filtration method (table 5-6b) will be used. The equipment options for processing samples for analysis of DOC are given in table 5-6c. (Refer to Appendix A5-D if the silver-filter method will be used to process samples for analysis of TOC, SOC (suspended organic carbon), or DOC.)

Equipment should be cleaned while still wet from sampling, preferably before leaving the field site. Immediately after each use, rinse the carbon-processing equipment at least three times with DIW and store it in a plastic bag until sampling is complete and there is time to clean the equipment using USGS standard procedures.

- Clean the carbon-collection and carbon-processing equipment according to the standard procedures described in NFM 3.3.4.C. **Do not use methanol or any other organic solvent to clean this equipment** (see TECHNICAL NOTE).
- If it is necessary to return to the office before cleaning the equipment, be sure to field rinse the equipment onsite immediately after use and then place it in a clean plastic bag for transport.
- After the equipment has been cleaned, double-wrap all apertures and the filter apparatus with aluminum foil and store them inside a sealable plastic bag for transport to the next site or storage in the office.

> TECHNICAL NOTE: Periodically check the NFM Comments and Errata page (http://water.usgs.gov/owq/FieldManual/mastererrata.html)under Chapters A3 and A5 for an update or any changes in equipment-cleaning procedures. If a circumstance arises in which methanol-cleaned equipment must be used to collect samples for DOC analysis, it is necessary to (1) record and report the total volume of water that has passed through the equipment before the DOC sample is collected, (2) collect a field blank sample for laboratory analysis by passing organic-grade blank water through the equipment, (3) collect a source-water blank for laboratory analysis, and (4) compare the laboratory results of carbon concentrations for the environmental and quality-control samples and document the results in field notes and in any report in which the DOC data are presented.

Table 5-6a. Equipment and supplies used to process samples for analysis of total particulate carbon and particulate inorganic carbon using the pressure-filtration method

[FEP, fluorinated ethylene-propylene; DOC, dissolved organic carbon; mm, millimeter; µm, micrometer; °C, degrees Celsius; mL, milliliter; in, inch; oz, ounce; lbs/in^2, pounds per square inch; mg/L, milligrams per liter; VOC, volatile organic compound]

Item	Description/Comments	Supplier or USGS One Stop Shopping Item Number[1]
FEP pressure-filtration apparatus (DOC-25)	Holds a 25-mm filter	Q444FLD
Ring stand and clamp	Holds the DOC-25 filtration unit	Open market
Filter, in-line vent, 50 mm	0.2-µm pore size; pre-filter to remove airborne particulates	Q445FLD
Peristaltic pump	Adjustable flow rate	Open market
C-Flex tubing	For use with pump	Q432FLD or Open market
Precombusted (baked) glass-microfiber filters (GF/F)	25 mm, 0.7-µm pore size, laboratory-baked at 400°C (3 filters are required)	Q441FLD
Metal forceps, two pair	Standard metal forceps for handling filter media	Q347BACT
Glass cylinder	100-mL graduated cylinder, cleaned	Open market
Aluminum foil squares	6 in x 6 in	Q443FLD
Whirl-Pak bags	6 oz	Q22FLD
Whirl-Pak bags	18 oz	Q21FLD
Aluminum foil	Heavy duty	Open market
Cooler and ice	Standard; check with shipper for size and weight restrictions	Open market
Replacement filter-support screen	25 mm, either stainless steel or polysulfone	Pall Gelman Laboratory Part nos. 79791 or 87265
Pressure gage (optional)	Glycerin-filled, 0-30 lb/in^2, to be inverted into side of a plastic tee that is positioned in-line between the peristaltic pump and the DOC-25 filtration unit.	Cole Parmer catalog no. P-07370-70 or equivalent
Organic grade water (if using this method for DOC processing)	Laboratory analysis of the water must certify a concentration of organic carbon that is less than the long-term laboratory reporting limit for DOC (currently <0.16 mg/L). Check the laboratory analysis for the lot number to confirm that it can be used.	N1590 (Pesticide-grade blank water) or N1580 (VOC-grade blank water)

[1]The equipment designated by the letters Q or N preceding a unique number is supplied exclusively for USGS studies through the USGS internal One Stop Shopping. The USGS performs quality-control checks for such equipment. Such equipment can be obtained for non-USGS studies on the open market or other source specified by the user. "Open market" designates equipment to be obtained from a retail or other vendor.

Table 5-6b. Equipment and supplies used to process samples for analysis of total particulate carbon and particulate inorganic carbon using the vacuum-filtration method

[mL, milliliter; mm, millimeter; µm, micrometer; °C, degrees Celsius; in, inch; oz, ounce; FEP, florinated ethylene-propylene]

Item	Description/Comments	Supplier or USGS One Stop Shopping Item Number[1]
Filtration flask	Polypropylene, 500 or 1,000 mL	Open market
Filter funnel	Polysulfone, 25 mm with 200-mL reservoir[2]	Open market
Peristaltic pump or hand pump	Adjustable flow rate	Open market
C-Flex tubing	For use with pump	Q432FLD or Open market
Baked glass-microfiber filters (GF/F)	25 mm, 0.7-µm pore size, laboratory-baked at 400°C (3 filters are required)	Q441FLD
Metal forceps, 2 pair	Standard metal forceps for handling filter media	Q347BACT
Glass cylinder	100-mL graduated cylinder	Open market
Aluminum foil squares	6 in x 6 in	Q433FLD
Whirl-Pak bags	6 oz	Q22FLD
Whirl-Pak bags	18 oz	Q21FLD
Aluminum foil	Heavy duty	Open market
Cooler and ice	Standard: check with shipper for size and weight restrictions	Open market

[1]The equipment designated by the letters Q or N preceding a unique number is supplied exclusively for USGS studies through the USGS internal One Stop Shopping. The USGS performs quality-control checks for such equipment. Such equipment can be obtained for non-USGS studies on the open market or other source specified by the user. "Open market" designates equipment to be obtained from a retail or other vendor.

[2]The filter-support screen can be replaced with a stainless-steel screen like the one used in the FEP pressure-filtration apparatus. Contact Pall Gelman Laboratory, 600 Wagner Road, Ann Arbor, MI, 48103-9019; phone (734) 665-0651.

Do not use methanol or any other solvent to clean TPC or DOC equipment (NFM 3).

Table 5-6c. Equipment and supplies used to process samples for analysis of dissolved organic carbon

[µm, micrometer; GF/F, glass microfiber filter; mm, millimeter; °C, degrees Celsius; FEP, florinated ethylene-propylene; oz, ounce; mL, milliliter; DOC, dissolved organic carbon; <, less than; mg/L, milligrams per liter; *N*, normal; VOC, volatile organic compound]

Item	Description and Comments	Supplier or USGS One Stop Shopping Item Number[1]
Gelman Sciences Supor capsule filter	Pleated polysulfone filter medium, in disposable polypropylene casing, 0.45-µm pore size	Q398FLD
----------or----------	----------or----------	----------or----------
Precombusted (baked) glass microfiber filters (GF/F)	25-mm diameter, 0.7-µm nominal pore size, laboratory baked at 400°C FEP pressure-filtration apparatus or filtration flask with funnel and associated equipment is required, as indicated in table 5-6a and table 5-6b, respectively	Q441FLD
4-oz amber glass bottle, baked	Bottles (125 mL) supplied for DOC samples have been pre-cleaned and baked at 400°C and quality-controlled to meet a detection limit criterion for organic carbon of <0.1 mg/L	Q28FLD
Sulfuric acid (H_2SO_4) preservative	4.5*N*-H_2SO_4, supplied in 1-mL vials	Q438FLD
Organic-grade water	Laboratory analysis of the water must certify a concentration of organic carbon that is less than the long-term laboratory reporting limit for DOC (currently <0.16 mg/L). Check the laboratory analysis for the lot number to confirm that it can be used.	N1590 (Pesticide-grade blank water) or N1580 (VOC-grade blank water)
Aluminum foil	Heavy duty	Open market
Cooler and ice	Standard; check with shipper for size and weight restrictions	Open market
Foam bottle sleeve	Individual bottles are slipped into foam sleeves to protect from breakage.	Q137FLD

[1]The equipment designated by the letters Q or N preceding a unique number is supplied exclusively for USGS studies through the USGS internal One Stop Shopping. The USGS performs quality-control checks for such equipment. Such equipment can be obtained for non-USGS studies on the open market or other source specified by the user. "Open market" designates equipment to be obtained from a retail or other vendor.

TPC, PIC, and POC sample processing

The sample-processing options described below involve use of either the pressure-filtration or vacuum-filtration method. The equipment and supplies needed are listed in tables 5-6a and 5-6b, respectively. Particulate analytes (TPC, PIC, POC, SOC) are reported in units of mass per volume (milligrams per liter), and therefore **the volume of sample passed through each filter must be measured accurately and recorded on the field form and the Analytical Services Request (ASR) form**.

- The amount of water to be filtered to obtain a sufficient quantity of material for the analysis depends on the suspended-sediment concentration and/or on the concentration of humic and other substances (such as organic and inorganic colloids).
- A graph of the historical stream stage plotted against suspended-materials concentration can aid in estimating concentrations of suspended materials. Suspended-material concentrations can be used to help select the volume of sample to be filtered for a POC determination (table 5-6d).
- Record the filtrate volume passed through each filter used for particulate analysis. **This is critical for calculation of POC concentrations.**

Table 5-6d. Guidelines for selecting the volume needed for filtration of samples for analysis of suspended and particulate organic carbon
[Guidelines are based on sand-sized materials; other physical property factors and chemical composition were not taken into account; mg/L, milligrams per liter; mL, milliliters; >, greater than]

Approximate concentration of suspended materials (mg/L)	Volume of sample to be filtered (mL)
1 - 30	250
30 - 300	100
300 - 1,000	30
> 1,000	10

For TPC and PIC samples, be sure to record the total volume of water that passed through each GF/F filter.

To process samples for analysis of TPC and PIC:

1. **Sampling location and collection:** Study objectives and site characteristics determine where the sample will be collected. Follow guidelines for (1) preventing sample contamination as described in NFM 4.0, (2) using the appropriate isokinetic or nonisokinetic method as described in NFM 4.1, and (3) preparing composites and subsamples or discrete samples as described in NFM 5.0 through 5.1.1.[2] Avoid the use of methanol-rinsed equipment.

2. Select one of the following three options. (Note that the actual volume of sample needed is determined by the concentration of particulates for the specific site and not by the bottle volume.)

   - **Collect a discrete sample with a weighted bottle sampler at centroid of flow** (see NFM 4, section 4.1.1.A, VCF method)—Load the sampler with baked 125-mL DOC bottles or a 1-L baked pesticide bottle, depending on the type of sampler being used. Cap all bottles securely after they are filled with sample.

   - **Collect, composite, and process the sample through a cone splitter**—Using procedures described in 5.1.1.B, collect the TPC/PIC subsample from the methanol-free cone splitter into a baked, 1-L pesticide bottle or into three to four baked 125-mL DOC bottles. Cap all bottles securely.

   - **Collect, composite, and process the sample through a churn splitter**—Using procedures described in 5.1.1.A, collect the TPC/PIC subsample from the churn splitter into a baked, 1-L pesticide bottle or into three to four baked 125-mL DOC bottles. Cap all bottles securely.

     TECHNICAL NOTE: An experiment to test the effect of sand in the polyethylene churn splitter on particulate carbon concentrations showed that, under most sampling conditions, the abrasion of material from the churn by sand particles will result in negligible bias in the analytical results. Caution is recommended in situations where very large concentrations of sand particles coincide with carbon concentrations that are close to the analytical minimum reporting limit (MRL).

---

[2]The guidelines described were designed for stream sampling. These procedures can be adapted for the collection of TPC, PIC, and TPN in ground-water samples, if necessary.

ALERT! Do not field rinse the baked DOC or pesticide bottles.

3. Cover the bench or table with a sheet of aluminum foil to make a clean work surface. Put on disposable, powderless gloves. Assemble necessary equipment and supplies on the clean work surface.
   a. Fold into thirds the aluminum foil square(s) into which the filters will be placed.
   b. To remove airborne particulates, attach an in-line, 0.2-µm pore-size filter to the inlet side of a dry pump hose between the filtration apparatus and the peristaltic or hand pump.
   c. Attach pump tubing to pump.
   d. Remove the aluminum foil wrapping from the equipment.
   e. Change gloves.
4. Prepare the filtration apparatus.
   - **Pressure-filtration method:**
     a. Open the bottom of the DOC-25 filtration unit.
     b. Using metal forceps, place a 25-mm, 0.7-µm pore size, GF/F onto the support screen in the base of the DOC-25 apparatus.
     c. Push the bottom white ring that holds the filter base up against the filter unit and screw it onto the base of the filtration-apparatus barrel by screwing the blue top ring down onto the bottom white ring.
        – Finger-tighten only. Turning the bottom white ring will cause the outer edge of the filter to be cut off, making removal of the filter difficult.
        – Take care not to wrinkle or tear the GF/F.
     d. Place the DOC-25 apparatus into the ring-stand clamp. Place a bottle or beaker under the DOC-25 filtration unit.
     e. Shake the sample vigorously to suspend all particulate matter and immediately pour an aliquot of the sample into the barrel of the DOC-25 apparatus. While pouring, ensure that the particulates remain suspended.
     f. Screw the top part of the DOC-25 apparatus onto the barrel and attach the peristaltic pump tubing.

- **Vacuum-filtration method:**
  a. Place the filter funnel on the filter flask.
  b. Lift the top part of the filter funnel.
  c. Using metal forceps, place the GF/F onto the base of the filter funnel. **Make sure the filter is not wrinkled or torn.**
  d. Place the top part of the filter funnel back on the base.
  e. Shake the sample vigorously to suspend all particulate matter and immediately pour an aliquot of the sample into the filter funnel. While pouring, swirl sample to ensure that the particulates remain suspended (top of filter flask can be covered with aluminum foil while swirling sample).
  f. Attach the pump tubing from the peristaltic pump or hand pump to the vacuum flask.

5. Apply pressure (pressure filtration) or suction (vacuum filtration) to start the flow of sample water through the filtration apparatus.
   - If using a peristaltic pump to pressurize the DOC-25, install a pressure gage in the line.
     a. Do not exceed about 15 lbs. of pressure.
     b. During pumping, a drop in pressure will signal when the last of the sample water has passed through the filter.
6. After an aliquot of sample has been filtered, tap the bottom of the filter apparatus and increase the pressure slightly to dislodge the remaining drops of sample water. When no more filtrate comes out:
   a. Depressurize the filtration apparatus carefully.
      – **Pressure-filtration method**: Remove the tubing to release the pressure and then remove the top of the DOC-25 apparatus. Check that there is no water on the filter and that the filter is covered with particulates. The particulate cake should not be extremely thick.
      – **Vacuum-filtration method**: Remove the foil cover and look into the top of the filter funnel. Check that there is water on the filter and that the filter is covered with particulates.
   b. If the filter is dry but not covered with particulates, add another aliquot of sample by repeating steps 4e-f, 5, and 6a until the filter is loaded to capacity. **It is important that all the water in the barrel be passed through the GF/F, leaving the filter "dry."**
   c. After the filter is dry and covered with particulates, go to step 7.

7. Pour the filtrate into a graduated cylinder and measure and record the volume on the field form and on the "Comments to NWQL" line of the ASR form.

8. Using organic-grade water, rinse any remaining particles from the sides of the DOC-25 barrel or the sides of the filtration funnel. **Do not include the rinse water in the measured volume.**

9. Discard filtrate. **Do not send this filtrate to the laboratory for analysis of DOC.**

10. After all the organic-grade water filtrate has passed through the DOC-25 filtration unit:

    a. Remove the DOC-25 apparatus from the ring stand.

    b. Continue pumping, rotating the DOC-25 apparatus at a slight angle while tapping the side of the filtration unit to evacuate any remaining water droplets that are clinging to the sides of the filtration unit. This procedure moves droplets toward the center of the filter surface for final passage through the filter.

    c. The procedure is complete when filtrate droplets are entirely evacuated and have passed through the filter-holder funnel.

11. After completing the rinse, depressurize the filtration apparatus. Change gloves.

12. Lift the top off the filter funnel to check that the filter is dry before proceeding to carefully remove the bottom of the DOC-25 apparatus.

    a. Open the previously folded aluminum foil square and place it on the clean work surface.

    b. Gently remove the filter from the filter holder with metal forceps. Do not touch the filter with your fingers. Using two metal forceps:

        i. Place the filter so that it is centered on one of the creases in the aluminum foil square; start the fold with the forceps, then press the foil down on top of the filter to complete the fold.

        ii. Fold it in half with suspended material on the inside. Do not lose any suspended material.

Wear safety glasses when pressurizing or depressurizing a filter apparatus.

13. Repeat steps 4-12 two more times until a total of three filters (two for TPC and one for PIC) have been processed.

    - **If the same volume of sample water was filtered through all three filters,** place them all, side by side, into one aluminum-foil envelope.
    - **If different volumes have been filtered,** use either three separate, properly labeled aluminum foil envelopes or use a single packet and write the volume for each filter on the outside of the foil in which each of the filters is located.

14. Close the other flap of the aluminum foil, turning the ends up carefully.

    i. Label the aluminum foil envelope(s) with site identification, date and time, total filtered volume of sample, laboratory sample-designation code, and the laboratory schedule requested.

    ii. Do not use tape and, if a preprinted label is used, do not let it wrap around the ends of the envelope. (The envelope will be opened and used at the laboratory when drying the filters.)

15. Place labeled aluminum foil envelope(s) into small (6 oz) Whirl-Pak bag(s) and seal the bag(s).

16. Place the 6-oz Whirl-Pak bag(s) inside a large (18 oz) Whirl-Pak bag and seal the large bag.

17. Place the 18-oz Whirl-Pak package into an ice-filled cooler and maintain the samples at or below 4°C during storage and shipment to the laboratory.

For TPC and PIC analyses, record the TOTAL volume of sample that passed through each filter.

DOC sample processing

The sample-processing options described below involve filtering the sample either through a GF/F and pressure-filtration apparatus (the pressure-filtration method), or through a capsule filter (the capsule-filter method) (Office of Water Quality Technical Memorandum 2000.08). The pressure-filtration and capsule-filter methods are described below and the equipment needed for each method is listed in tables 5-6a and 5-6c, respectively. The silver-filter method and equipment are described in Appendix A5-D.

- Use organic-grade water when collecting an equipment blank or field blank for quality control. Organic-grade water is deionized water that has been certified by laboratory analysis of the lot to have an organic-carbon concentration that is less than the laboratory reporting limit (currently at 0.16 mg/L for DOC).
- Each equipment or field blank designated for carbon analysis should be accompanied by a source blank collected from the same lot of organic-grade water as is used for the equipment and field blanks.

> TECHNICAL NOTE: A laboratory study to compare the results of the DOC analysis in same-source water that was filtered through 0.45-µm pore-size silver-filter media, the Gelman 0.45-µm Supor™ capsule filter, and 0.7-µm GF/F determined no statistically significant differences in DOC concentrations (Charles Patton and George Aiken, U.S. Geological Survey, written commun., 2001).

- USGS designations and preservation treatment for various filtered samples are listed below. The general order of preservation is to acidify all samples requiring HCl treatment first, followed by those for H_2SO_4 treatment if nutrient samples are to be acidified, and then those for HNO_3 treatment. Wholewater samples are preserved along with their filtered counterparts. The chamber cover is changed with each change in the acid treatment.

  - FAM: filtered, acidified with HCl, for mercury analysis.
  - FCC: filtered and chilled to ≤ 4 °C for nitrogen and phosphorus nutrient analysis.
  - FCA: filtered, acidified with H_2SO_4, and chilled to ≤ 4 °C for nitrogen and phosphorus nutrient analysis.
  - DOC: filtered, acidified with H_2SO_4, for dissolved organic carbon analysis.
  - FA: filtered, acidified with HNO_3, for trace-element and major-cation analysis.
  - FAR: filtered, acidified with HNO_3, for radiochemical analysis.

Capsule-filter method:

1. Collect samples. Set up a clean capsule filter and sample bottle(s) within a protective chamber using the Clean Hands method (NFM 4.0.1).

   a. **Surface Water:** Follow guidelines for (1) preventing sample contamination as described in NFM 4.0, (2) using the appropriate isokinetic or nonisokinetic method as described in NFM 4.1, (3) preparing composites and (or) subsamples or discrete samples as described in NFM 5.0 through 5.1.1, and (4) equipment selection and quality control as described in the TECHNICAL NOTE below.

   b. **Ground Water:** Follow standard guidelines for (1) well purging (NFM 4.2), (2) sampling (NFM 4.0, 4.2, 5.0, and 5.1.2), and (3) equipment selection and quality control as described in the TECHNICAL NOTE below. Use a clean bailer that has not contacted methanol if other sampling equipment has been methanol-rinsed. Sample collection and filtration can be conducted in the same protective chamber.

   > TECHNICAL NOTE: Process the DOC sample after other filtered samples have been processed. To prevent methanol contamination of the sample, do not use methanol-rinsed collection and processing equipment, and use a new capsule filter. Collection and analysis of field-blank and source-blank samples is recommended. If methanol-rinsed equipment must be used, collection of these blanks to correlate with each DOC sample is required, regardless of the volume of water passed through the system before DOC sample collection. Taking these quality-control measures does not remove the possibility of methanol contamination of the sample, however.

2. Change gloves. Place a 125-mL baked glass amber bottle under the capsule filter outlet.

   - Do not field rinse the DOC bottle.
   - Do not splash sample water.
   - Pass 1 L of **organic-grade water** (certified for organic-carbon concentration of less than the laboratory reporting limit through the capsule filter). If collecting a quality-control sample, go to step 3.
   - Pass at least 1 L of **sample water** through the capsule filter before collecting the DOC sample.

3. Fill the bottle to its shoulder.

4. Cap the bottle and transfer it to the preservation chamber.

5. Change gloves. Open the DOC bottle in the preservation chamber. Add the contents of a 1-mL H_2SO_4 vial to the DOC sample.
6. Cap the DOC bottle securely. Shake the sample bottle vigorously to mix the sample and H_2SO_4.
7. Remove the DOC bottle from the preservation chamber.
8. Check that the bottle is labeled correctly and completely. Place the bottle in a foam sleeve and then into an ice-filled shipping container.
9. Maintain the sample at or below 4°C without freezing (NFM 5.5).

Pressure-filtration method:

1. Collect sample(s).
   a. **Surface Water:** Follow guidelines for (1) preventing sample contamination as described in NFM 4.0, (2) using the appropriate isokinetic or nonisokinetic method as described in NFM 4.1, (3) preparing composites and (or) subsamples or discrete samples as described in NFM 5.0 through 5.1.1, and (4) equipment selection and quality control as described in the TECHNICAL NOTE below.
   b. **Ground Water:** Follow standard guidelines for (1) well purging (NFM 4.2), (2) sampling (NFM 4.0, 5.0, and 5.1.2), and (3) equipment selection and quality control as described in the TECHNICAL NOTE below.

   TECHNICAL NOTE: To prevent methanol contamination of the sample, avoid using methanol-rinsed collection and processing equipment. If methanol residue is a concern, process the DOC sample either before introduction of any methanol-rinsed equipment or well after the work area has been cleared of methanol-rinsed equipment and methanol fumes. Collection and analysis of field-blank and source-blank samples is recommended. If methanol-rinsed equipment must be used, collection of these blanks to correlate with each DOC sample is required, recording the volume of water passed through the system before DOC sample collection. Taking these quality-control measures does not remove the possibility of methanol contamination of the sample, however.

2. Cover the bench or table with a sheet of aluminum foil to make a clean work surface. Assemble the necessary equipment on the clean work surface, wearing disposable powderless gloves.

   a. When using the DOC-25 filtration apparatus, remove airborne particulates as follows: attach an in-line, 0.2-µm pore-size filter (table 5-6a) to the inlet side of a dry pump hose or to the outlet between the peristaltic pump and the DOC-25 unit. If attaching the DOC-25 on the inlet side, be sure to dedicate a piece of tubing for the sole purpose of channeling air flow.

   b. Remove the aluminum foil wrapping from the precleaned equipment.

   c. Change gloves.

3. Prepare the filtration apparatus:

   a. Remove the bottom barrel of the filtration apparatus.

   b. With metal forceps, place a clean GF/F filter onto the support screen in the base of the filtration apparatus. **Make sure that the filter medium is not wrinkled or torn.**

   c. Push the bottom white ring that holds the filter base up against the filter unit and screw it onto the base of the filtration-apparatus barrel by screwing the blue top ring down onto the bottom white ring.

      – Finger-tighten only. Turning the bottom white ring will cause the outer edge of the filter to be cut off, making removal of the filter difficult.

      – Take care not to wrinkle or tear the GF/F.

   d. Open the top of the filtration-apparatus barrel and fill with approximately 100 mL of wholewater sample.

      – **For water with high concentrations of suspended materials** (usually in surface water), collect the sample into a clean baked glass bottle, cap it securely, place it on ice, and allow the suspended materials to settle; then, pour 100 mL of the clear supernatant into the filter barrel.

      – **For surface water,** the 100-mL wholewater sample can be either a subsample collected from the churn or cone splitter or the supernatant from the bottle(s) used in the weighted-bottle sampler.

      – **For ground water,** the 100-mL wholewater sample is collected directly from the pump discharge unless turbidity is high. For turbid samples, follow the procedure described above for water with high concentrations of suspended materials.

      – **For a quality-control sample,** use organic-grade blank water.

e. Screw the top part of the filter apparatus onto the barrel and attach the pump tubing.

f. Apply pressure, regulated to less than 15 lb/in^2, to start the flow of sample water through the filter apparatus.

g. Place a 125-mL clean, baked glass bottle under the discharge tube of the filtration apparatus. **Do not field rinse the DOC bottle.**

h. Fill the DOC bottle to the shoulder with sample filtrate.

- If the filter clogs before 100 mL of sample for DOC analysis can be filtered, depressurize the filtration unit, empty the remaining volume of wholewater sample from the barrel, and remove the clogged GF/F filter.
- Using clean metal forceps, replace the old filter with a new GF/F filter, following the directions from steps 3b-g above for a pressure-filtered DOC sample.

4. After the DOC sample bottle has been filled to the shoulder, cap the bottle and transfer it to the preservation chamber.

5. Depressurize and dismantle the filtration apparatus, discarding the used GF/F filter(s). Clean the apparatus immediately (while still wet), following the USGS procedures prescribed in NFM 3.3.4.C. If the apparatus cannot be field-cleaned immediately, it must be cleaned the same day it is used and before being reused—rinse it copiously with DIW and place it into a plastic bag so that it will not dry before being cleaned.

6. Change gloves before working in the preservation chamber.

7. In the preservation chamber, open the DOC bottle. Add the contents of a 1-mL vial containing 4.5*N* H_2SO_4 preservative.

8. Cap the DOC bottle securely and shake vigorously to mix the sample. Remove the DOC sample bottle from the preservation chamber.

9. Check that the bottle is labeled correctly and completely. Place the bottle into a foam sleeve and into an ice-filled shipping container (see NFM 5.5 for correct shipping procedures).

10. Maintain the sample at or below 4°C without freezing (NFM 5.5).

Wear safety glasses when pressurizing or depressurizing the filter apparatus.

11. To collect a QC sample:

    a. Use the same carbon-processing equipment after it has been cleaned (see step 5, above).

    b. Label bottles.

    c. Change gloves.

    d. Working in a clean processing chamber, process a sample of organic-grade water through the cleaned carbon-sampling and carbon-processing equipment, following the steps prescribed in steps 2-4 above. Cap securely and pass the bottle to the preservation chamber.

    e. Follow steps 6-10 above for sample preservation, handling, and shipping.

    f. Depressurize and dismantle the filtration apparatus, discarding the used filter(s). Allow the apparatus components to air dry in a clean chamber. Cover the apertures of the dry apparatus with aluminum foil and place in a clean, sealable plastic bag for storage.

Never increase the pressure in a filter apparatus to greater than 15 lb/in^2 in order to increase the rate of filtration.

SOLID-PHASE EXTRACTION OF PESTICIDES 5.3

By **M.W. Sandstrom**

Samples collected for analysis of dissolved pesticides can be processed at the laboratory or onsite through a column containing pesticide-specific sorbents. Onsite solid-phase extraction (SPE) is useful, especially at remote sites, because pesticides isolated on the sorbent are less susceptible to degradation than when in water. Also, the SPE cartridges are less expensive to ship than water samples. However, onsite SPE is not required, and in some situations, laboratory SPE might be preferred.

All SPE methods require that the water sample be filtered (section 5.2.2.A) as soon as possible after collection. General equipment and supply needs for SPE for a broad-spectrum analysis of pesticides are listed in table 5-7 and general instructions are given in sections 5.3.1 and 5.3.2. More detailed information on SPE methods and procedures can be found in Sandstrom and others (1992), Sandstrom (1995), Zaugg and others (1995), Lindley and others (1996), and Werner and others (1996).

- Filter the environmental sample (section 5.2.2.A): this is necessary to prevent blockage of the SPE column by particulate material.
- Process the pesticide sample through an SPE column within 4 days of collection.
- Determine the reagents needed for the SPE method to be used (for example, conditioning solution, surrogate solution, and field-matrix spike solution).

Table 5-7. Checklist of general equipment and supplies required for broad-spectrum pesticide analysis by onsite solid-phase extraction

[SPE, solid-phase extraction; mm, millimeter; µL, microliter; µm, micrometer; mL, milliliter; NWQL, National Water Quality Laboratory]

✓	General equipment and supplies[1]	Description	Number required
	Aluminum foil	Heavy duty	1 box
	Blank water[2]	Pesticide grade (NWQL)	4 L
	Filter media	Glass microfiber, 147-mm diameter, 0.7-µm pore diameter, precleaned[3]	1 per sample
	Detergent, nonphosphate laboratory	0.2-percent solution	4 L
	Glass bores	Disposable, for 100-µL micropipet	ample supply
	Gloves, disposable	Powderless, latex or nitrile, assorted sizes	ample supply
	Graduated cylinder or beaker	50 mL, glass	2
	Luer™ connector[2], Tefzel™ male	P-625	1 or more
	Metering pump, valveless, piston-type	FMI Model RHB OCKC	1
	Methanol	Pesticide grade (NWQL)	4 L
	Micropipet	Fixed volume (100 µL)	1 or more
	Nut and union[2], Tefzel™	P-623	1 or more
	Plastic beaker	1 L, for collecting extracted water	1 or more
	Plate-filter assembly	147-mm diameter, aluminum or stainless steel	1
	Portable balance	(Check method for weight requirements.)	1
	Sample bottles[3] and vials (40 mL)[2]	Amber glass, precleaned	1 per sample
	SPE column adapter[2]	(Check method requirements)	1 or more
	SPE columns, precleaned[2]	C-18: Analyticum™ C-18, 500 mg; Carbopak-B™, 500 mg; Other: as required	1 or more of each, as required
	SPE solutions[2]	(Check method requirements for conditioning, surrogate, and spike solutions)	as required by method
	Stopwatch	Standard	1
	Wash bottle, fluorocarbon polymer	250 mL, for methanol	1
	Wash bottle, fluorocarbon polymer	250 mL, for pesticide-grade water	1

[1]Filtration equipment and supplies are described in section 5.2.2.A, table 5-5, and figure 5-1.

[2]Supplies are ordered by USGS personnel through E-mail to NWQL-DENSUPPL.

[3]Supplies are ordered by USGS personnel from the Ocala Water-Quality Research Laboratory in Ocala, Fla.

SOLID-PHASE EXTRACTION BY C-18 COLUMN 5.3.1

The C-18 SPE column is used for samples that will be analyzed by capillary column gas chromatography/mass spectrophotometry with selected ion monitoring using NWQL schedule 2010 for a broad spectrum of pesticides.[8] Detailed descriptions of the method and laboratory and field extraction procedures are found in Zaugg and others (1995). For C-18 SPE processing, obtain a precleaned Analytichem™ SPE column (500 mg) and the other supplies and equipment described in the spike kit available from the NWQL (table 5-7).

Quality-control samples are required as an integral part of the sampling program.

- Process an initial field blank and then after about every 10 to 20 samples.
  - Use pesticide-grade blank water (PBW, obtained from the laboratory).
  - Process the blank in the same manner as you process the environmental water sample.
- Process a field matrix spike about every 20 samples. When processing a field matrix spike:
  - Collect duplicate samples.
  - Use a 100-µL micropipet to add the spike solution (mixture) to one of the duplicate samples. The concentration of spike solution can vary, depending on availability and the needs of the study (1 ng/µL concentration is commonly used at this time). Follow the instructions provided with the spike kit.
  - Add the surrogate to every spiked sample and an associated unspiked sample.
  - Record lot number and concentration of spike mixture on the NWQL Schedule 2010 Reporting Form (worksheet) (fig. 5-2).

[8]C-18 solid-phase extraction method is used for isolation and concentration of 41 pesticides and pesticide metabolites with concentrations of 4 mg/L or less in natural water samples (atrazine, alachlor, cyanazine, and metolachlor have upper concentration limits of 20 mg/L) (Zaugg and others, 1995).

Schedule 2010 Field Extraction Checklist and Reporting Form
U.S. Geological Survey/National Water Quality Laboratory
Solid-Phase Extraction and GC/MS Analysis Filtered Water

Station ID or Unique Number: _____ Station Name _____
Date: _____ Time: _____ Collector: _____
Telephone Number of Collector: _____
Comments: _____

NWQL INFORMATION

❑ SPE Column Brand or Type: _____
Lot #: _____
Dry weight (wt.): _____ grams (g)

ON-SITE INFORMATION

❑ Filter Sample (0.7-µm glass fiber filter)
Prior to filtration record bottle tare wt.: _____ g
❑ SPE column Conditioning
Methanol (2 mL): _____ milliliters (mL)
Pesticide-grade water (2 mL): _____ mL

(DO NOT LET COLUMN GO DRY ONCE CONDITIONING STARTED)

❑ Sample Sample + bottle wt: _____ g
– Bottle tare wt: _____ g
= Sample wt: _____ g
Add methanol conditioner (1% of sample wt.): _____ mL
Sample + bottle + methanol: _____ g
❑ Surrogate Solution ID: _____
Volume added (100 µL): _____ µL
❑ QA Samples – Spike Mixture
Solution ID: _____
Volume added (100 µL): _____ µL
❑ Sample through column _____ g
Sample + plastic beaker _____ g
Plastic beaker _____ g
❑ Flow Rate (= Sample wt. extracted/Time) _____ g
Start time _____ hr:min
Finish time _____ hr:min
❑ Remove excess water. Write station ID,date,time, on column. Store in 40-mL vial @ 4°C.

NWQL INFORMATION

Lab ID: _____ Set#: _____ Date Received _____
❑ Dry Column with N_2 or CO_2: Date:
Pressure: _____ lb/in^2
Time: _____ min
Dry SPE column wt.: _____ g
❑ SPE Elution _____ Date: _____
Add 1.8 mL elution solvent _____ mL
❑ Internal Standard (PAH-dn mixture in toluene keeper)
Solution ID: _____
Volume added (100mL): _____ mL
❑ Evaporate solvent - nitrogen
Pressure: _____ lb/in^2
Time: _____ min

Analysis: Instrument ID: _____ Date: _____
Comments:

Figure 5-2. Worksheet for C-18 solid-phase extraction of pesticides.

Prepare to process samples onsite using the C-18 SPE column:

1. Cover a bench or table with a sheet of aluminum foil to make a clean work surface. Put on appropriate disposable, powderless gloves.
2. Collect and split samples using the appropriate procedures (NFM 4; NFM 5.1; Sandstrom and others, 1995). Filter the samples as instructed in section 5.2.2. Wear gloves (usually latex or nitrile) during sample collection and processing.
3. Set up the necessary equipment and supplies and assemble them on the clean work surface. Remove the aluminum foil wrapping from the pre-cleaned equipment.
4. Record the sampling site information, the lot number and dry weight of the C-18 SPE column, and the surrogate solution identification number on the Schedule 2010 worksheet (fig. 5-2).
5. Change gloves.
6. Tare the weight of a clean amber glass 1-L sample bottle and a 1-L plastic beaker to the nearest gram using an analytical balance and record the weights on the Schedule 2010 worksheet.

Extract the sample:

Use the appropriate surrogate solution mixture supplied by the NWQL for the C-18 SPE method with each environmental sample.

SAMPLE EXTRACTION SHOULD BE COMPLETED ONSITE, IF POSSIBLE. If onsite extraction is not possible, extract the sample within 4 calendar days of collecting the sample.

1. Condition the SPE column:
   a. Pipet 2 mL of pesticide-grade methanol into the C-18 SPE column and allow it to flow through the column by gravity. Collect the methanol rinse in a proper container for disposal.
   b. Remove any excess methanol by rinsing approximately 2 mL of PBW, by gravity, through the column. The rinse water/ methanol mixture must be disposed of according to local, State, or Federal regulations.

c. **Do not allow the SPE column to go dry once the conditioning has started.**

- If the column goes dry, repeat the conditioning process.
- To keep the column from drying out once the conditioning has started, maintain water in the C-18 SPE column by replacing water that drained through the column. Alternatively, attach an on/off valve-to-column outlet to prevent complete draining before the sample is extracted.

2. Following the filtration instructions for general organic compounds (5.2.2.A or Sandstrom, 1995), pass about 1 L of sample through the a glass microfiber filter into the tared bottle, leaving about 2 cm of head-space.
3. Weigh the filled bottle and record the weight on the worksheet (fig. 5-2).
4. Add about 10 mL of methanol to the filtered sample using the bottle-top dispenser or a volumetric pipet. Weigh and record the sample-plus-methanol weight on the worksheet.
5. Add the surrogate solution contained in the 2-mL amber screw-cap vial to the filtered sample as follows (refer to Spike Kit Instruction Manual for detailed information and instructions on use of a micropipet):
   a. Withdraw the surrogate solution from the 2-mL amber screw-cap vial using a clean 100-µL micropipet and a clean glass bore.
   b. Insert the tip of the glass bore into the sample bottle below the surface of the sample, and depress the plunger to deliver the surrogate to the sample. (Tip the bottle on its side, if necessary, to reach below the surface of the sample with the glass bore.)
   c. Keeping the plunger depressed, swirl pipetor in water several times and then withdraw the micropipet from the bottle. Release the plunger, then remove the used glass bore from the micropipet and discard properly.
   d. Rinse the fluorocarbon polymer tip of the micropipet with methanol.
   e. Add the field-matrix spike as dictated by the study's quality-assurance plan, as required.
   f. Cap and swirl the sample to mix the sample + surrogate. (For spiked samples, mix sample + surrogate + spike solution.)
   g. If a duplicate will be submitted for analysis, repeat steps 5a–f on the duplicate sample.

6. Extract the sample through the SPE column using a metering pump fitted with 3.18 mm (1/8 in.) fluorocarbon polymer tubing with appropriate connectors (Sandstrom, 1995; NFM 2).
   a. Insert clean tubing from the inlet side of the pump into the sample bottle.
   b. Turn on the pump, flush air from the tubing (be careful to minimize any sample discharge from the end of the tubing), and then attach the outlet side of the tubing to the small end of the SPE column.
   c. Invert the SPE column to drain any remaining conditioning water left in the SPE column reservoir.
   d. Begin extraction by pumping the sample through the column at a rate of 20 to 25 mL/min and collect the extracted water into the tared 1-L plastic beaker.
7. After the sample has been pumped through the SPE column, turn the pump off and disconnect the column.
8. Remove excess sample from the SPE column using a syringe with 10 to 20 mL of air to push excess sample into a plastic beaker.
9. Weigh the beaker containing the volume of sample extracted through the SPE column. Subtract the tare weight of the beaker from the weight of the beaker plus the extracted sample and record this weight on the worksheet.
10. Write the sample identification number and the sampling date and time on the side of the SPE column. Place the SPE column into a 40-mL glass or plastic shipping ampoule and wrap it in aluminum foil.
11. Finish filling out the worksheet (fig. 5-2). Wrap the completed worksheet around the shipping ampoule and secure it with a rubber band or tape. Place in a sealable plastic bag.
12. Chill the SPE column immediately and maintain between 4°C and 25°C during storage and shipping.
13. Keep a copy of the worksheet for the field folder.

14. Field clean all equipment, including the pump and tubing, immediately after use and before going to the next site (NFM 3).
    a. Rinse thoroughly with about 50 mL of a 0.2-percent solution of a phosphate-free laboratory detergent, followed by about 50 mL of tap water (or DIW) to remove the detergent.
    b. Final rinse with about 30 to 50 mL of methanol. Collect used methanol into an appropriate container for disposal.
15. After cleaning, wrap all the equipment apertures with aluminum foil.

Ship the SPE column to the laboratory immediately. Elution from the SPE column must be completed within 7 days of extraction.

5.3.2 SOLID-PHASE EXTRACTION BY CARBOPAK-B™ COLUMN

The Carbopak-B™ method currently (November 1998) is used for NWQL schedule 2051, which is for analysis of a broad spectrum of field-extracted pesticides.[9] Detailed descriptions of the method and the laboratory and field-extraction procedures can be found in Werner and others (1996). General equipment needs for solid-phase extraction are listed in table 5-7. For Carbopak-B™ SPE processing, obtain the SPE column, Carbopak-B™, 500 mg, precleaned; surrogate mixture and field-matrix spike-solution mixture for Carbopak-B™ SPE and PBW; ascorbic acid solution, 10 g/L; and reagent-grade sodium chloride (NaCl) 10 g/sample.

[9]The Carbopak-B™ method is graphitized carbon-based solid-phase extraction used with a high-performance liquid chromatographic analytical method for determining 41 pesticides and pesticide metabolites that are not readily amenable to gas chromatography or other high-temperature analytical techniques (Werner and others, 1996).

Quality-control samples are required as an integral part of the sampling program.

- Process a field blank with the first sample. Process additional field blanks about every 10 to 20 samples:
  - Use pesticide-grade blank water (PBW).
  - Process the blank in the same manner as the environmental water sample.
- Process field-matrix spikes about every 20 samples. When processing a field-matrix spike:
  - Use a 100-µL micropipet to add the field-matrix-spike solution to two of the triplicate samples. Follow the instructions provided in the spike kit.
  - Add the surrogate to every matrix-spiked sample and associated unspiked sample.
  - Record lot number and concentration of spike-solution mixture on the NWQL Schedule 2051 worksheet (fig. 5-3).

Before beginning field work, prepare an ascorbic acid solution in the office laboratory:

Each Carbopak-B™ requires 15 mL of ascorbic acid solution. Check that you have the volume needed before leaving for the field site(s).

The ascorbic acid solution must remain capped and chilled unless in use. The shelf life of the solution is 28 days—discard if shelf life has been exceeded or if the solution has been left uncapped or unchilled.

1. Place a tared, 1-L amber glass pesticide bottle (cleaned at the NWQL) on an analytical balance and fill to 500 g with PBW (pesticide-grade organic-free water purchased from NWQL DENSUPPL).
2. Empty a 5-g vial of ascorbic acid into the 500 g of PBW to obtain a 10-g/L ascorbic acid solution. Cap immediately and shake to dissolve.
3. Label the bottle with the date and preparer's name, contents of the solution, and the concentration of ascorbic acid.
4. Refrigerate the solution immediately and keep chilled until ready for field use. Transport to the field on ice in a foam sleeve.

Schedule 2051 Field Extraction Checklist and Reporting Sheet Solid-Phase Extraction, HPLC Analysis, Filtered Water

Station ID or Unique Number: _____
Station Name: _____
Date: _____
Time: _____
Collector: _____

❑ Filter Sample	0.7-µm glass fiber filter		
❑ SPE Cartridge Conditioning	Ascorbic acid solution [15 mL]	_____	mL
❑ Sample	Sample + bottle weight	_____	g
	– bottle tare weight	_____	g
	= sample weight	_____	g
❑ Surrogate	Solution lot number	_____	
	Volume added	_____	µL
– QA Samples Spike Mixture	Solution lot number	_____	
	Volume added	_____	µL
❑ Sample through Cartridge	Sample + plastic beaker	_____	g
	– plastic beaker	_____	g
	= volume of sample extracted	_____	mL
❑ Flow Rate	Start time	_____	hr:min
	Stop time	_____	hr:min

❑ Write Station ID Number and Sampling Date on Cartridge

❑ Remove Excess Water

❑ Replace Cartridge in Shipping Container and Store @ 4°C

❑ Comments:

Figure 5–3. Worksheet for Carbopak-B™ solid-phase extraction of pesticides.

Prepare to process samples onsite using the Carbopak-B™ column:

1. Put on disposable, powderless gloves during sample collection and processing. Cover a bench or table with a sheet of aluminum foil to make a clean work surface.
2. Collect and split samples using the procedures described in NFM 4 and NFM 5.1 (refer also Sandstrom and others, 1995; Werner and others, 1996).
3. Set up the equipment and assemble supplies on the clean work surface. Remove the aluminum foil wrapping from equipment.
4. Begin to fill out the NWQL Schedule 2051 worksheet (fig. 5-3), recording the type, lot number, and dry weight of the Carbopak-B™ SPE column.
5. Put on a new pair of gloves.
6. Tare the weight of a clean amber glass, 1-L sample bottle and a 1-L plastic beaker to the nearest gram using an analytical balance. Record the weight on the worksheet provided with each column.
7. Following the filtering instructions for general organic compounds (section 5.2.2.A or Sandstrom, 1995), filter about 1 L of sample through a glass microfiber filter into the tared bottle, leaving about 2 cm of headspace.
8. Weigh the filled bottle and record the weight on the worksheet (fig. 5-3).
9. Calculate and record the sample weight.

Extract the sample:

When extracting the sample, be sure to use the appropriate surrogate solution mixture supplied by the NWQL for the Carbopak-B™ SPE method. Add surrogate solution to all samples including field blanks, replicates, and field-matrix spikes.

Sample extraction must take place within 4 days of sample collection.

1. Withdraw surrogate mixture using a clean 100-µL micropipet and glass bore (detailed instructions on the use of a micropipet are included in the NWQL spike kit).
2. Insert the tip of the glass bore below the surface of the sample in the sample bottle and depress the plunger to deliver the surrogate mixture. (Tip the bottle, if necessary, to reach below the surface of the sample with the micropipet tip.) Keeping the plunger depressed, swirl sample with the pipetor several times and then withdraw the micropipet. Release plunger, then remove and discard the used glass bore.
3. Leave approximately 2 cm of headspace for the addition of NaCl.
4. Rinse the tip of the micropipet with methanol.
5. Add 10 g of NaCl to each sample. Cap and swirl the sample.
6. Process field-matrix spikes, if dictated by the study's quality-assurance plan. To process spikes, set aside three subsamples and spike two of the three subsamples with spike-solution mixture obtained from the NWQL spike kit. Follow the instructions provided with the kit.
7. Fill a clean glass graduated cylinder or beaker with 15 mL of ascorbic acid solution.
8. Using a metering pump fitted with 1/8-in. fluorocarbon polymer tubing and appropriate connectors:
   a. Turn on the pump.
      - Adjust the pump flow rate to deliver about 20 to 25 mL/min (1 drop per second).
      - Test the flow rate by pumping the cleaning solution into a graduated cylinder or beaker and timing with a stopwatch.
   b. Attach the outlet end of the pump tubing to the SPE-column adapter.
   c. Remove the SPE column from the shipping container and attach to the adapter. (The open end of the SPE column should fit tightly over the adapter; make sure the column is sealed completely against the lip of the adapter to create a leak-proof seal.)
   d. Place the inlet end of the pump tubing into 15 mL of ascorbic acid and pump the ascorbic acid solution through the column at a rate of 20 to 25 mL/min.
9. After all ascorbic acid solution has been pumped through the column, continue to pump air through the column for 1 minute. The conditioned column is now ready for sample extraction. **Extract sample onto the column within 8 hours of conditioning with ascorbic acid.**

10. Insert the inlet end of the pump's fluorocarbon polymer tubing into the sample bottle to begin sample extraction.
11. Pump sample through the Carbopak-B™ SPE column at a rate of 20 to 25 mL/min and collect extracted water in tared 1-L plastic beaker.
12. After the sample has been pumped through the column, turn off the pump and disconnect the SPE column.
13. Remove excess sample from the SPE column by using a syringe with 10 to 20 mL of air to push the excess sample into the tared, 1-L plastic beaker.
14. Weigh the beaker with the volume of sample processed through the SPE column (subtract tare weight of beaker from weight of beaker plus sample) and record the weight of the sample processed through the column on the worksheet (fig. 5-3).
15. Write the station identification number and the sampling date and time on the side of the SPE column and place the SPE column in a shipping container (40-mL glass or plastic ampoule). Complete the worksheet, wrap it around the shipping ampoule, and secure it with a rubber band or tape. Place SPE-column sample in a sealable bag. Keep a copy of the worksheet for the field folder.
16. Chill the SPE-column immediately and maintain at 4°C during storage and shipping.

Ship the SPE column to the laboratory immediately. Elution from the SPE column must be completed within 7 calendar days of extraction.

17. Field clean all equipment including the pump and tubing immediately after use (NFM 3) and before going to the next site. Rinse thoroughly with about 50 mL of a 0.2-percent solution of phosphate-free laboratory detergent, followed by about 50 mL of tap water or DIW to remove the detergent. Final rinse with 30 to 50 mL of methanol. Collect methanol rinse into an appropriate container. After cleaning, wrap all equipment apertures with aluminum foil.

SAMPLE PRESERVATION 5.4

By **D.B. Radtke**

Sample preservation is the measure or measures taken to prevent reduction or loss of target analytes. Analyte loss can occur between sample collection and laboratory analysis because of physical, chemical, and biological processes that result in chemical precipitation, adsorption, oxidation, reduction, ion exchange, degassing, or degradation. Preservation stabilizes analyte concentrations for a limited period of time. Some samples have a very short holding time. **Verify that time-dependent samples were received in proper condition, at the correct temperature, and that holding times were not exceeded by contacting the laboratory.**

Some samples must be preserved by filtration (section 5.3) and (or) chilling and (or) chemical treatment (Appendixes A5-A through A5-C). The preservation required for a given sample is described by the analyzing laboratory; for the NWQL, consult the laboratory for sample-preservation instructions.

- Before going to the field site and again at the field site:
  - Check the sample-designation code required for each sample.
  - Check sample requirements for chilling and chemical treatment.
  - Check with the laboratory and make note of holding time restrictions.

CHILLING 5.4.1

Immediately following sample collection and processing, samples that require chilling must be packed in ice or placed in a refrigerator and maintained at 4°C or less, without freezing, until analyzed.

- Check that there is sufficient headspace in the sample bottle to allow for sample expansion.
- Put foam sleeves around samples in glass bottles before packing them in ice.

- **Include a temperature check sample in the shipping container.**
  - Fill a polyethylene bottle with tap water, cap it securely, and label it "Temperature Check Sample," along with the site identification and the date(s) and time(s) of sampling and shipping.
  - Prepare a self-addressed, stamped postcard that is labeled "Temperature Check Sample report." The postcard should include the site information, date(s) and time(s) of sampling and shipping, and a space for the laboratory to record the arrival temperature of the check sample.
  - Put the postcard into the sealable plastic bag with the ASR form. The laboratory will record the temperature of the check sample upon arrival and will complete the card and return it to the sender.
  - Use this information to document that samples were maintained at 4°C or less.

Pack a temperature-check sample with other chilled samples.

Chilled Samples

[This list of samples that require chilling is not comprehensive—check with the analyzing laboratory. These samples must be refrigerated or placed on ice immediately and maintained at or below 4 degrees Celsius without freezing.]

Chemical classification	USGS sample-designation codes[1]
Organic compounds	VOC, GCC, TOC, DOC, SOC, RCB, LC0052, SH 2010, SH 2051, SH 2001, SH 2050
Nutrients	WCA, FCA, FCC
Chemical Oxygen Demand (COD)	LC 2144
Cyanide	LC 0880, LC 0023
$^{15}N/^{14}N$	RUS; LC 1717, LC 1718
^{14}C	RUR/RUS; LC 1199

[1]These sample-designation codes are unique to the USGS and are subject to change.

CHEMICAL TREATMENT 5.4.2

Chemicals used for sample preservation depend on the target analyte (Appendixes A5-A, A5-B, and A5-C). The most frequently used chemical preservatives by the USGS are provided in individual ampoules and contain one of the following: ultrapure nitric acid (HNO_3), hydrochloric acid (HCl), sulfuric acid (H_2SO_4), sodium hydroxide (NaOH), or phosphoric acid/copper sulfate ($H_3PO_4/CuSO_4$). The National Water Quality Laboratory can provide a complete list of sample treatments, along with sample designations and container requirements. The preservatives are procured from QWSU and come with a quality-control certificate of analysis for selected constituents. Keep the certificate of analysis in the study data file to help with future interpretation of quality-control and environmental data.

Take steps to minimize sample contamination and maximize safety during the preservation process (Horowitz and others, 1994; Shelton, 1994; Koterba and others, 1995; Timme, 1995). Note that a chemical preservative for one sample may be a source of contamination for another. To help reduce contamination during the preservation process and ensure proper handling of chemicals:

- Work inside a preservation chamber (only the Clean Hands person works inside the chamber). **Change gloves and the cover of the portable preservation chamber each time a different type of chemical treatment is used**. Clean Hands/Dirty Hands techniques must be used for parts-per-billion levels of trace elements and are recommended for use in general and as appropriate for the study.
- Use preservatives packaged in individual ampoules for routine preservation. Be aware that preservatives dispersed from dropper-type bottles or automatic pipets could become contaminated and could result in the contamination of subsequent samples.
- Use the grade of preservative appropriate to meet data-quality requirements. (Check the certificate of analysis for the method detection limit and the concentration of the target analytes of interest.)

- Always store preservatives in separate, sealed containers, preferably away from each other, and away from environmental and quality-control samples.
- Store spent preservative ampoules, containers, and supplies separately in closed and labeled containers (such as screw-cap bottles) until they can be disposed of properly.
  - Use a separate ampoule-waste container for each type of chemical preservative.
  - Store used gloves and chamber covers in a closed container, such as a pail with a lid, until proper disposal can be arranged.
- Follow a prescribed order in which samples are to be preserved (the recommended order is described in the steps below).

CAUTION: Before handling any chemical, refer to the Material Safety Data Sheet (MSDS) for safety precautions. Wear appropriate gloves, safety glasses, and apron when working with corrosive or oxidizing solutions.

For chemical treatment and handling of samples, follow the recommended sequence and procedure described in the steps that follow:

1. Put on appropriate disposable, powderless gloves.
2. Set up preservation chambers and assemble equipment and solutions in the order in which they will be used. If nitric acid is the only chemical preservative being used, the processing chamber can be used as a preservation chamber after all the filtered samples have been removed from the chamber.
3. Rinse the outside of each preservative ampoule with DIW and dry with a laboratory-grade, lint-free paper towel (for example, Kimwipe™).
4. For organic-compound samples:
   a. Change gloves.

b. Place inside the preservation chamber the required organic-compound samples, chemical preservatives (treatments), and ampoule-waste containers. Common treatments include hydrochloric acid, sulfuric acid, or phosphoric acid/copper sulfate. **(VOC samples that are to be chemically treated can have the acid preservative added to the sample within the processing chamber as long as subsequent samples are not contaminated (section 5.1.2 and Appendix A5-A).**

c. Change gloves.

d. Uncap the sample bottle and dispense the appropriate chemical treatment into the sample. Place any spent ampoule into the appropriate ampoule-waste container.

e. Immediately recap the sample bottle and invert the bottle about five times to mix. **Vials with septum-lined caps for VOC must have no headspace.**

f. Repeat steps b, c, and d for each type of chemical treatment, if necessary, changing gloves and chamber cover each time. Make sure there is headspace in all glass bottles except for the vials for volatile organic compounds (VOC).

g. Chill all organic samples (treated and untreated) immediately and maintain them at 4°C during storage and shipment to the laboratory (section 5.5).

5. For inorganic-constituent samples:

a. Change gloves.

b. Change the chamber cover. Set up additional preservation chambers, if practical. (For example, one chamber for nitric acid treatments and a separate one for potassium dichromate treatment.)

- Transfer samples requiring chemical treatment to the preservation chamber.
- Place the first preservative and its waste container inside the chamber.
- Change gloves.

c. Add chemical treatments to samples in the following order:

i. Major, minor, and trace cation samples: Add contents of the vial containing 2 mL of 6N ultrapure HCl to the sample(s) designated RAM or FAM (Appendix A5-B). Place the spent ampoule into the HCl vial waste container.

ii. Mercury sample(s): Add contents of the $HNO_3/K_2Cr_2O_7$ ampoule to the sample(s) designated RAM or FAM (Appendix A5-B). Place the spent ampoule into the $HNO_3/K_2Cr_2O_7$ ampoule waste container.

iii. Change chamber cover and change gloves.

iv. Nutrient samples designated WCA or FCA (Water Quality Technical Memorandum 99.04):

- Place sample bottles into chamber.
- Add contents of the 1-mL 4.5-normal H_2SO_4 ampoule to 125-mL samples designated as WCA or FCA (Appendix A5-B). Place the spent ampoule into the H_2SO_4 ampoule waste container.
- Chill samples to 4°C or below without freezing immediately after adding the sulfuric acid.

v. Change chamber cover and gloves. Place bottles requiring other acid treatments into the chamber, along with the necessary chemicals and chemical-waste containers. Add the hydrochloric or other acid treatments to the samples. Place spent ampoules in appropriate waste containers.

vi. Remaining samples (Appendixes A5-B and A5-C): Change the chamber cover and change gloves for each type of treatment (for example, zinc acetate, sodium hydroxide, copper sulfate).

d. Tighten the cap on the bottle immediately after adding the chemical treatment and invert about five times to mix.

- Chilled samples must be put on ice and shipped to the laboratory immediately.
- Emptied ampoules must be stored in designated waste or recycle containers.

6. Disassemble and clean the chamber frame.
   a. Remove the disposable cover from the chamber and the work area.
      - Collapse the plastic cover while outside of the field vehicle.
      - Tie a knot in the cover to close it.
      - Dispose of the cover as regulations require.
   b. Clean the chamber frame, if necessary.
7. Document in field notes the preservation procedures and chemical treatments used.
8. Spent ampoules should be collected and, at the end of each field trip, disposed of according to Federal, State, and local regulations. (The District safety officer and water-quality specialists can be consulted for proper ampoule-disposal methods.)

HANDLING AND SHIPPING OF SAMPLES 5.5

By **D.B. Radtke**

Samples should be packaged and shipped to the laboratory for analysis as soon as possible. Generally, the shorter the time between sample collection/processing and sample analysis, the more reliable the analytical results will be. Before shipping samples to the laboratory:

- Check that sample bottles are labeled correctly.
- Complete an Analytical Services Request (ASR) form.
- Pack samples carefully in the shipping container to prevent bottle breakage, shipping container leakage, and sample degradation. Check that the bottle caps are securely fastened.

Protocols for labeling, documenting, and packaging samples established by the receiving laboratory must be followed. **Obtain authorization from the laboratory before shipping highly contaminated or potentially hazardous samples for analysis.** A summary of procedures for shipping samples to the NWQL is outlined below. Office of Water Quality Technical Memorandum 92.06 and National Water Quality Laboratory Technical Memorandum 95.04 give detailed instructions on shipping procedures.

LABELING SAMPLE BOTTLES 5.5.1

Each sample bottle must be correctly labeled with the station identification number, date, time, and sample designation. Sample designation is established by the laboratory. Laboratory codes that are added or deleted from the analytical schedule requested should be recorded on the ASR forms that accompany the samples—**not on the sample bottles.**

1. Label each bottle with a permanent, waterproof marker, or use preprinted labels that will remain securely attached to the bottles, even if they become wet.

2. Write legibly and include as a minimum the following information:
   - Station identification number.
   - Date and time of sample collection.
   - Sample designation code (Appendixes A5-A through A5-C).

A bottle with an unreadable label or no label is a wasted sample.

5.5.2 FILLING OUT AN ANALYTICAL SERVICES REQUEST FORM

Each set of samples must include an Analytical Services Request (ASR) form. To ensure correct processing of samples, the information recorded on the ASR form must correspond to each sample in the shipment.

- **Never send a sample to the NWQL without an ASR form** (forms are available through DENSUPPL).
- **Information recorded on ASR forms must be legible** and completed in permanent ink or by computer.

Fill out the ASR form as follows, including as much information about the sample(s) as possible:

1. Record mandatory information:
   - Station identification number and (or) unique number
   - Telephone number at which field personnel who collected the samples can be reached
   - Name of study chief and (or) field personnel
   - State and District user codes
   - Project account number
   - Date and time at beginning of field trip
   - Schedules and laboratory codes of the analytical work requested for submitted samples

2. Record the Sample Medium, Analysis Status, Analysis Source, Hydrologic Condition, Sample Type, and Hydrologic Event information. This information is mandatory if the analytical results are to be stored in the USGS National Water Information System (NWIS) data base.
3. Record the field-measurement values of specific electrical conductance (conductivity), pH, and field alkalinity (or acid neutralizing capacity).
4. In the comments section of the form, add information that needs to be brought to the laboratory's attention. **Be sure to note if the samples are potentially hazardous or highly contaminated so that proper precautions can be taken by laboratory personnel.**
5. At the bottom of the ASR form, list the total number of sample bottles for each sample-designation code.
6. To prevent water damage to paperwork accompanying samples to the laboratory (such as the ASR form and the temperature-check postcard), place all paperwork inside two sealable plastic bags. In coolers, tape the bags containing the paperwork to the underside of the lid.
7. Keep a copy of the completed ASR forms in the study files.

Add a bold cautionary note to the ASR form if samples could contain hazardous concentrations of contaminants.

.

5.5.3 PACKAGING SAMPLES

When packaging samples for shipment to the laboratory, remember that all bottles must be protected from breaking (especially glass bottles) and (or) leaking. The laboratory usually will return with the cooler reusable packing materials such as mesh bags, foam sleeves, and bubble wrap. Plastic bags and cardboard boxes will not be returned. **Do not use foam peanuts or vermiculite.**

When packaging samples:

1. Make sure bottle labels are waterproof and that information is legible.
2. Tighten all bottle caps to prevent leakage.
3. Line all shipping containers, including those without ice, with doubled heavy-duty plastic bags.
4. Use adequate packing material to prevent bottle breakage.
   - Ship all glass bottles in foam sleeves or wrap them with bubble wrap.
   - Enclose each sleeved FAM and RAM bottle in two sealable plastic bags.
   - Pack bottles so that they do not touch each other.

Sample integrity must be maintained. Ship samples with enough ice to keep chilled at 4°C or below without freezing until the sample is logged in at the laboratory.

5. Pack samples designated for chilling in coolers.
   a. Use insulated ice chests (coolers) (1- to 5-gallon sizes are recommended). Larger volumes of chilled samples can be sent in coolers as long as the carrier's maximum weight and size restrictions are not exceeded. **Do not use broken or leaky coolers.**
   b. Pack samples designated for chilling with ice.
      - The volume of ice should be equal to or greater than the volume occupied by samples (twice the volume of ice to samples is recommended during warm temperatures).
      - The amount of ice necessary will vary depending on the length of time in transit and ambient air temperature. Chilling the cooler and samples prior to shipment is recommended in hot weather.
      - **Do not use blue ice or other types of commercial refreezing containers that have freezing points below 0°C.** This can cause bottles to freeze and result in ruined samples or broken bottles.
      - Enclose ice and samples in doubled plastic bags. **Do not mix ice with water-absorbent packing materials.**
   c. Seal cooler spouts or drains, preferably with silicone or epoxy.
6. Samples not requiring chilling can be shipped in heavy-duty cardboard boxes but may also be shipped in coolers.

DO NOT USE

— foam peanuts or vermiculite as packing material.

— dry ice to keep samples chilled.

7. When shipping multiple sets of samples in the same container, label each set of sample bottles with a different letter of the alphabet (A, B, C) so that bottles of each sample set will have the same letter.
   - Print the letter in the upper right-hand corner of the ASR form for that particular sample set.
   - Place all bottles from a sample set into a separate bag (such as plastic or mesh) or bind with a rubber band to keep them together.

8. All bottles for a particular schedule should be sent in the same shipping container, with some exceptions. Samples that do not need to be chilled can be packed and shipped in the cooler with chilled samples, provided the following exceptions do not apply. The ASR form must list only those samples that are being shipped with that form. On the ASR form, delete laboratory codes of any sample bottles not included in the same shipping container.
   - **Exception: Do not ship nutrient samples with samples that were treated with HNO_3.**
   - **Exception:** Do not ship FAM and RAM samples in the same container as FA or RA samples when requesting sample analysis for potassium and (or) chromium concentrations.
9. After samples and ice (if required) are placed in doubled plastic bags, close each bag separately with a knot.
10. Inside coolers:
    - Include a return address shipping label with the ASR form. This label must include a street address (not a post office box number), an account number, and the USGS District User Code (to bill return-shipping charges).
    - Label the inside of each cooler and cooler lid with a current return address and telephone number, using a permanent waterproof marker.
11. Include the ASR form for each sample set shipped in each cooler or box.
    - Remember to place the ASR form and temperature-check postcard into two sealable plastic bags to prevent water damage.
    - Tape the plastic bag containing the ASR form(s) and temperature-check card to the underside of the cooler lid, or place the sealed paperwork on top of samples packed in a cardboard box.

SHIPPING SAMPLES 5.5.4

Whenever possible, ship samples to the laboratory on the day of collection. Check laboratory hours of operation—keep in mind that the laboratory might not receive samples on Saturdays, Sundays, or holidays. The integrity of chilled samples sent late on a Thursday or on a Friday could be compromised if not received by the laboratory in time to be unpacked and refrigerated. Check planned arrival time before selecting the carrier service.

- No carrier service will accept or deliver leaky boxes or coolers. Securely tape the outside of shipping containers to prevent leaking and to maintain container integrity.
- Do not exceed maximum weight and size restrictions set by the carrier service.
- When shipping a single set of samples in multiple containers, mark the outside shipping label with the number of containers being shipped (such as 1 of 2, 2 of 2).
- Comply with the carrier service's requirements for meeting U.S. Department of Transportation regulations for transporting hazardous substances.
- **Identify samples that require special shipping procedures:**
  - Send chilled samples to the laboratory by the fastest means possible.
  - Some samples require special handling and shipping (such as radon and CFC samples). Contact the laboratory for specific instructions.
  - Obtain authorization from the laboratory before sending any highly contaminated or potentially hazardous samples to the laboratory for analysis.

Document date of sample shipment on the copy of each ASR form. Keep a copy in study files.

SUMMARY OF SAMPLE-COLLECTION AND SAMPLE-PROCESSING PROCEDURES FOR SPECIFIC ANALYTES 5.6

By **F.D. Wilde and Jacob Gibs**

Collection methods, equipment needs, and preservation requirements for specific analytes can change over time, owing to advancements in knowledge and technology. Any major changes to sample collection and processing procedures will be announced on the USGS Office of Water Quality Web site (http://water.usgs.gov/lookup/get?owq/) or as a technical memorandum (http://water.usgs.gov/lookup/get?techmemo/). Consult NWQL or the District water-quality specialist for instructions related to the collection, processing, or analysis of solid materials, gases, biota, and any other analytes not described in this manual. Chemical formulas used in this section are spelled out in "Conversion Factors, Selected Terms, Abbreviations, and Chemical Formulas."

COMMON ORGANIC COMPOUNDS 5.6.1

Sample bottles for organic-compound analyses are precleaned and baked at the laboratory and should be received capped. Collect and process samples within processing and preservation chambers, as appropriate, and while wearing disposable, powderless latex or nitrile gloves. In general, change gloves between each collection and processing step and with each new sample type. After collection and processing, check that the information is correct on the bottle label. Place the filled glass sample bottle in a foam sleeve and chill sample to 4°C or below without freezing.

- Most samples for organic-compound analysis are collected in 1-L amber glass bottles, leaving headspace in case of sample expansion (Appendix A5-A).

- Samples for glyphosphate analysis are collected in 40-mL vials, leaving headspace in case of sample expansion.
- Volatile organic compounds are collected in 40 mL baked glass vials without headspace.

Do not field rinse bottles prepared for organic-compound samples.

5.6.1.A Volatile Organic Compounds (VOCs)

Label baked 40-mL amber glass vials as "VOC." Collect three vials per sample for ground water and four vials per sample for surface water.

- **Do not use tape on the vials.** Tape causes the autosampler to jam.
- **Do not aerate the sample.** Samples with air bubbles must be discarded.

TECHNICAL NOTE: **Some programs, such as NPDES and NAWQA, require treatment of VOC samples by adding HCl.** To determine the number of HCl drops needed to lower sample pH to ≤2 before collecting the sample, collect a test sample toward the end of purging and pour 40 mL of the sample into a beaker or spare VOC vial. Check the pH (use narrow-range pH indicator strips such as pHydrion™) after each addition of 2, 3, and 4 drops. Do not use pH indicator strips that are old or expired.

To collect VOC samples:

1. Insert the fluorocarbon polymer discharge line from the pump or the bailer emptying device to the bottom of the vial; flow should be smooth and uniform (between 100 and 150 mL/min).
   - If the vial was supplied with chemical treatment, do not fill vial to overflowing.
   - If no chemical treatment will be added or if the treatment will be added after the vial is filled, allow sample to overflow the vial in order to help purge air from the sample.
2. Slowly withdraw the discharge line from the bottle; slide the discharge line to the side of the vial as the line is about to clear the vial so as to avoid breaking the water surface. Leave a convex meniscus.

3. Add chemical treatment (HCl) to sample if required by the program and if the HCl is not already in the vial. Add 2 to 5 drops (see TECHNICAL NOTE above) of 1:1 HCl:H_2O, drop by drop, to the filled vial to lower the pH to ≤2. Dispense the HCl from a fluorocarbon polymer dropper bottle. **Do not add more than 5 drops of HCl**.
4. If residual chlorine is present, add 25 mg of ascorbic acid to the vial in addition to the HCl.
5. Replace the vial cap immediately. Do not allow the samples to degas. The fluorocarbon polymer (white) side of the septum in the cap should contact the sample.
6. Invert the vial and tap the vial to release any bubbles. Check carefully for gas bubbles in the sample. If gas bubbles are present, discard the sample vial and resample. If degassing of the samples makes excluding bubbles impossible, record this on the field forms and the laboratory ASR form and report an estimate of the relative volume of bubble(s) in the sample.
7. Protect the sample from sunlight. Chill and maintain at 4°C or below without freezing.

Semivolatile Organic Compounds (Base-Neutral Acids), Pesticides, Organonitrogen Herbicides, Polychlorinated Biphenyls (PCBs) 5.6.1.B

Label 1-L baked glass bottles as "GCC." Add the laboratory code, if required. Certain analytical schedules require a filtered sample (check with the laboratory for processing and bottle requirements).

1. Fill to the shoulder of the bottle directly from the sampling, splitting, or filtering device.
2. Be sure to leave headspace in the bottle.
3. Chill and maintain at 4°C or below without freezing.

Instructions for field solid-phase extraction (SPE) of pesticides are provided in section 5.3. Field SPE is an alternative method for processing samples for pesticide analysis and should be considered in situations where transporting glass bottles, shipping weight, or holding/shipping times pose a problem. Field SPE samples usually are extracted after most other onsite activities are completed or by a third team member because equipment setup, sample extraction, and equipment cleaning can be quite time consuming.

5.6.1.C Phenols

Label 1-L baked amber glass phenol bottle as "LC0052."

1. Fill the bottle with raw sample directly from the sampling or splitting device.
2. Leave a small headspace in the bottle.
3. Add 2 mL of 8.5 percent H_3PO_4 to a 1-L sample to achieve pH 4, and 10 mL of $CuSO_4$ to a 1-L sample (100 g/L).
4. Chill and maintain at or below 4°C without freezing.

5.6.1.D Carbon

Particulate organic and inorganic carbon[10]***:***

1. Label the samples for Total Particulate Carbon (TPC) as "LC2606" and for Particulate Inorganic Carbon (PIC) as "LC2608." Note that the concentration of Particulate Organic Carbon (POC, LC2611) is calculated as the difference between TPC and PIC.
2. Refer to the detailed instructions given in section 5.2.2.C for processing the TPC and PIC samples.

Raw (TOC) sample:

1. Use 125-mL baked glass bottles. Label the sample for total organic carbon "LC114."
2. Pour, discharge, or pump the raw sample directly into the sample bottle, up to the shoulder of the bottle (leave headspace).

[10]The analysis for total particulate nitrogen (TPN), LC2607, is performed on the TPC sample upon request.

Filtered (DOC) and suspended (SOC) samples:

1. Label the DOC sample as follows: (a) "LC2612" if processed through a Supor capsule filter; (b) "LC2613" is processed through a GF/F; and (c) "LC113" if processed through a silver filter.
2. Refer to the detailed instructions given in section 5.2.2.C for processing DOC using either the capsule or GF/F filtration procedures. Fill the 125-mL baked glass bottle to the shoulder—allow enough heasdspace for the addition of 4.5*N* H_2SO_4 and the expansion of the chilled sample. Refer to the instructions given in Appendix A5-D if using the silver-filter procedure.
3. Label the SOC sample as "LC305." Refer to the detailed instructions given in Appendix A5-D for the silver-filter procedure. LC305 is available only as a custom analysis.

Methylene Blue Active Substances (MBAS) and Oil and Grease 5.6.1.E

MBAS:

1. Label a 250-mL polyethylene bottle as "RCB."
2. Field rinse the bottle and fill with raw sample.
3. Chill and maintain at 4°C or below without freezing.

Oil and grease:

1. Label a 1-L baked amber glass bottle as "LC0127."
2. Do not field rinse; fill with raw sample, leaving a small headspace.
3. Add approximately 2 mL of sulfuric acid to reach a pH <2.
4. Chill and maintain at 4°C or below, without freezing.

MAJOR IONS AND TRACE ELEMENTS 5.6.2

Bottles (including acid-rinsed polyethylene and glass bottles) used to collect samples for analysis of major ions and trace elements should be rinsed and partially filled with DIW before they are used at the field site, as instructed in NFM 3. Exceptions apply when collecting samples for analysis of isotopes or radiochemicals—consult the isotope laboratory. Collect and process samples within processing and preservation chambers, as appropriate, and while wearing appropriate (for example, vinyl) disposable, powderless gloves. In general, change gloves between each collection and processing step. After collection and processing, check the bottle label for correct information and place glass bottles into foam sleeves.

- Use acid-rinsed bottles (for cations) only if they arrive capped with colorless translucent caps. Do not use any acid-rinsed bottles that are received uncapped.
- Before going to the field, first rinse and then half fill each bottle with DIW as described in NFM 3.
- Discard DIW from bottles at the field site before field rinsing and (or) sampling.
- **Field rinse the inside of sample bottles and bottle caps with sample** (table 5-2; Appendix A5-B). Use filtrate to rinse the bottles that will contain filtered sample.

5.6.2.A Major and Minor Cations and Trace Elements

Use of Clean Hands/Dirty Hands techniques and good field practices are required for samples with parts-per-billion concentrations of trace elements and are recommended for all samples.

Raw samples:

1. Label acid-rinsed polyethylene bottles as "RA" for major and minor cations and most trace-element samples. Label bottles with the laboratory schedule, as appropriate.
   - Arsenic, antimony, and selenium analyses—Label bottles as "RAH." (Some samples are designated "USEPA"—check with the laboratory.)
   - Mercury samples—Label glass bottles as "RAM."
   - USEPA drinking water samples—Label bottles as described in NWQL Technical Memorandum 97.05 or as directed.
2. Field rinse and fill sample bottles directly from the sample-collection or processing device.
3. Add chemical treatment, as specified by the analyzing laboratory.
   - Major and minor cations and trace elements: Add HNO_3 to lower sample pH to <2.
   - Mercury: Add contents of vial containing 2 mL of 6*N* ultrapure HCl.

Filtered samples:

1. Label acid-rinsed polyethylene bottles as "FA" for most trace-element samples, including arsenic, antimony, and selenium. Check NWQL Technical Memorandum 97.05 for requirements for USEPA drinking water samples.
   Exception: Mercury—Label the acid-rinsed 250-mL glass bottles as "FAM."
2. Field rinse and fill sample bottles directly from the filter assembly. Refer to section 5.2 for filtration instructions.

3. Add chemical treatment, if specified by the analyzing laboratory.
   - Major and minor cations and trace elements: Add HNO_3 to lower sample pH to <2.
   - Mercury: Add contents of vial containing 2 mL of 6*N* ultrapure HCl.

Nutrients (Nitrogen and Phosphorus) 5.6.2.B

Refer to Office of Water Quality Technical Memorandums 94.16, 99.04 and 2000.08 for the most recent changes to collecting and processing nutrient samples. See 5.6.1.D and 5.2.2.C for processing of a Total Particulate Nitrogen (TPN) sample, LC2607.

Raw samples:

1. Label bottles as follows:
   - "WCA" for raw samples to be treated with H_2SO_4 (125-mL translucent bottles are preferable).
   - "ERC" for raw samples collected for the USEPA Drinking Water Program (refer to National Water Quality Laboratory Technical Memorandum 97.05 or contact the laboratory for instructions).

     A clean, graduated cylinder may be used when the volume of sample to be filtered is less than 64 mL.
2. Field rinse and fill the sample bottles directly from the sampler or sample splitting device.
3. Add a chemical treatment to WCA and ERC samples, as appropriate.
4. Chill WCA and ERC samples immediately and maintain at 4°C or below without freezing.

Filtered samples:

1. Label bottles as follows:
   - FCC" for filtered samples (125-mL brown bottles).
   - FCA" for filtered samples to be treated with H_2SO_4 (125-mL brown bottles).
2. Field rinse and fill sample bottles directly from the capsule filter or other filter assembly.

- **Use of 0.45-µm pore-size filter media is the standard to date for State or Federal programs that regulate drinking water and for routine water-quality studies for which consistency with historical nutrient data is necessary.**
- Use of 0.2-µm pore-size filter media is recommended for studies for which exclusion of bacteria from the sample is desirable, and inconsistency with historical data is not an issue. Prefilter sediment-laden samples through 0.45-µm filter media. Record the filter pore size used, if other than 0.45 µm, under the comments section on the field form and ASR forms.

3. Add chemical treatment to FCA samples. (FCC samples do not require chemical treatment.)
4. Chill FCC and FCA samples immediately and maintain at 4°C or below without freezing.

5.6.2.C Anions

Label polyethylene bottles as "FU" (filtered untreated). Process alkalinity samples for field titration using the same steps as for other anions (with the exception of ANC samples) (NFM 6).

1. Refer to section 5.2 for filtration instructions.
2. Field rinse and fill sample bottles directly from the capsule filter (or filter assembly).
3. Do not add chemical treatment.

Exceptions:

- **Cyanide**—Label the 250-mL polyethylene bottle as "LC0880" for filtered sample and as "LC0023" for raw sample. **Cyanide requires addition of NaOH to raise the pH to >12.**
- **ANC** (acid neutralizing capacity)—Do not filter the ANC sample. Label sample bottle as "RU" (NFM 6).

TABLE ISOTOPES AND RADIOCHEMICALS 5.6.3

Isotopes and radiochemicals generally are not processed in a processing or preservation chamber, unless samples are being handled in a glove box. Wear appropriate, disposable, powderless gloves when collecting and processing samples.

Leave enough air space (at least 2 cubic centimeters) if glass bottles are used and the sample will be chilled to allow for the expansion of water samples unless instructed otherwise (Appendix A5-C). Close the polyseal cap tightly and seal with wax or plastic tape, or as directed below for the specific isotope or radiochemical.

Carbon ($^{13}C/^{12}C$ and ^{14}C) 5.6.3.A

Do not let the sample contact air. Filter the sample along with other inorganic-constituent samples if particulates are visible. **Samples without particulates do not require filtration or chemical treatment** (NWQL Technical Memorandum 96.05). If ^{13}C will be collected by direct precipitation in the field using ammoniacal $SrCl_2$, then the precipitates must be submitted as washed, dried, homogenized powders. **The laboratory will not accept bottles with ammoniacal $SrCl_2$ in solution.**

Samples for $^{13}C/^{12}C$ analysis:

1. Label a 1-L glass bottle as "$^{13}C/^{12}C$, RUS," and the laboratory code or schedule number (as requested by the laboratory).
2. Filter the sample if particulates are visible. Establish a closed path from the sample source through the filter and to the bottle to exclude air from the collection system.
3. When filling the bottle, fill from the bottom of the bottle and allow an overflow of two to three bottle volumes. Cap the sample immediately.

Samples for ^{14}C analysis:

The sample must provide a minimum of 5 mg dissolved inorganic carbon (DIC) per sample container.

1. Label bottles as "^{14}C, RUS/RUR," and the appropriate laboratory schedule number. Check with the laboratory and refer to NWQL Technical Memorandum 96.05 for bottling and other field requirements for samples to be analyzed for ^{14}C.
2. Collect sample in duplicate. Filter the sample if particulates are visible. Establish a closed path from the sample source, through the filter, to the bottle to ensure that air is excluded from the collection system.
3. Fill sample container.
   - For samples with ^{14}C content greater than or equal to 5-percent modern carbon, fill the bottle from the bottom of the bottle, allowing an overflow of 2 to 3 bottle volumes. This helps to purge air from the sample. Cap the bottle immediately. For potentially low ^{14}C concentrations, (<10 percent modern carbon) or if relatively long filtration time is required, flush the headspace above the water sample with nitrogen while filling the bottle.
   - For samples with ^{14}C content less than 5-percent modern carbon, use a stainless steel collection vessel, such as a Whitey™ Sample cylinder No. 304L-HDF4, with stainless steel valves on each end. Flush with several liters of filtrate from the bottom of the cylinder up and close the cylinder, leaving no headspace.
4. Archive a duplicate sample and store in the dark, chilled to 4°C or below without freezing.
   - Secure container caps with electrical tape.
   - Record the sample pH and alkalinity on the sample bottle.

Hydrogen ($^{2}H/^{1}H$) and Oxygen ($^{18}O/^{16}O$) 5.6.3.B

Hydrogen and oxygen isotope samples can be collected together in one bottle. Use either a 60-mL clean glass bottle or a 250-mL polyethylene bottle. Label the bottles as "RUS, SH 1142." Use caps with polyseal conical inserts. **To request bottles with appropriate caps, send E-mail to isotopes@usgs.gov.**

- Do not field rinse bottles.
- Do not add chemical treatment.
- Samples may be either raw or filtered.

1. Fill bottle to overflowing directly from the sampler or sample splitting device (raw sample) or from the capsule filter or other filter assembly (filtered sample).
2. If filling a glass bottle, fill to overflowing and then decant the sample until the water level is at the bottle shoulder. Cap the bottle immediately
3. If filling a polyethylene bottle, fill to overflowing and cap the bottle immediately, leaving no headspace. Do not use polyethylene bottles if the sample will be held or archived.

5.6.3.C Nitrogen ($^{15}N/^{14}N$)

Collect filtered, untreated sample **(do not use mercuric chloride)** in a 1-L amber or foil-wrapped glass or high-density polyethylene bottle. Use a polyseal bottle cap. Refer to National Water Quality Technical Memorandum 95.05.

1. Label the bottles as "RUS" and with the appropriate laboratory code (LC 1717, for $^{15}N/^{14}N$ as ammonia; LC 1718, for $^{15}N/^{14}N$ as nitrate; or LC 1921, for $^{15}N/^{14}N$ as nitrate plus ammonia).
2. Fill the bottle to the shoulder directly from the capsule filter or other filter assembly.
3. Put the glass sample bottle into a foam sleeve and keep it chilled at or below 4°C without freezing. Ship overnight, per shipping instructions in NWQL Technical Memorandum 95.04.

5.6.3.D Sulfur ($^{34}S/^{32}S$)

Dissolved sulfide and sulfate are collected and processed separately, according to the directions given in Carmody and others (1998).

1. Label the bottles as "RUS" and with the appropriate laboratory code or schedule number.
2. Send questions to the following E-mail address: <isotopes@usgs.gov>. Special equipment, chemical reagents, and training are needed in order to collect these samples properly.
   Sulfate: Procedures and equipment differ for processing the sulfate sample, depending on whether sulfate concentrations are less than 20 mg/L or equal to or greater than 20 mg/L. Onsite estimation of sulfate concentration is described in Carmody and others (1998).
   - When a water sample from which dissolved sulfate will be collected for isotopic analysis also contains dissolved sulfide (greater than 0.01 mg/L), the sulfide should be removed by nitrogen stripping to avoid contamination of the sulfate sulfur by oxidized sulfide sulfur with very different isotopic composition.

- Sulfate in water with concentrations of greater than 20 mg/L sulfate is collected by precipitating $BaSO_4$ from an acidified sample (up to 2-L volume). $BaSO_4$ can be precipitated and filtered in the laboratory or in the field.
- Anion exchange resin can be used to collect sulfate from samples in which sulfate concentrations are less than 20 mg/L.

Sulfide: Determine if dissolved sulfide (H_2S) is present by its distinctive rotten-egg odor. Measure H_2S concentration with a field spectrophotometer.

- Measurement of dissolved sulfide concentrations greater than 0.6 mg/L with a field spectrophotometer has been problematic.
- An alternative method for samples with dissolved sulfide concentration greater than about 0.5 mg/L is to collect the dissolved sulfide by direct precipitation of Ag_2S by adding $AgNO_3$ to the sample. Care must be taken to add sufficient $AgNO_3$ to precipitate all the sulfide present, or the sulfide sample will be fractionated.
- A method for collection of dissolved sulfide by nitrogen stripping and precipitation of Ag_2S in an $AgNO_3$ trap has been tested and found to cause a small fractionation of the isotopic composition of the sulfide. Two approaches are recommended to minimize this fractionation: (1) collect sulfide by nitrogen stripping for 3 hours or more to minimize the amount of sulfide left in the carboy and, thus, the fractionation produced; and (2) determine the kinetic fractionation factor (α) for the collection apparatus and use this α to calculate the original sulfur isotopic composition of the dissolved sulfide in the ground water from Ag_2S collected for a short time (about 30 minutes).

5.6.3.E Radium 226 and Radium 228

Label acid-rinsed polyethylene bottle(s) as "FAR" and add the appropriate laboratory code ("LC 794" for radon-226 and "LC 1364" for radon-228). Bottle-size requirements depend on analytical method or schedule.

1. Filter the sample using the procedures for inorganic-constituent samples, and fill the sample bottle to the shoulder directly from the capsule filter or other filter assembly.
2. Add reagent-grade HNO_3 to preserve sample to pH <2. **Do not substitute HCl for HNO_3.**

5.6.3.F Uranium (U-234, U-235, U-238)

Label 1-L acid-rinsed polyethylene bottle(s) as "FAR, SH 1130." Check with the laboratory for bottle requirements for the analysis requested.

1. Filter the sample and fill the sample bottle to the shoulder directly from the capsule filter or other filter assembly.
2. Add reagent-grade HNO_3 to preserve the sample to pH <2. **Do not substitute HCl for HNO_3.**

5.6.3.G Gross Radioactivity

Label 1-L acid-rinsed polyethylene bottle(s) as "FAR" (filtered sample) for the gross alpha and the gross beta analyses and with the appropriate laboratory schedule number. The laboratory schedule requested depends on the concentration of total dissolved solids in the sample.

1. Filter the sample.
2. Fill the sample bottle to the shoulder directly from the capsule filter or other filter assembly.
3. Add reagent-grade HNO_3 to preserve the sample to pH <2. **Do not substitute HCl for HNO_3.**

Tritium 5.6.3.H

Label a 1-L bottle as "RUR" and add the appropriate laboratory code. (High density polyethylene bottles are preferred; a glass bottle with a polyseal cap may be used. Refer to National Water Quality Technical Memorandum 92.04.)

- Do not place tritium samples near watches or other devices with luminescent dials. Do not store sample near tritium sources (for example, glowing clocks, watches, signs).
- **Do not field rinse sample bottles.**

1. Fill bottle with raw, untreated sample. The bottle should be dry before being filled. It might be desirable to flush the bottle with a filtered, inert gas such as argon or nitrogen before leaving for the field—consult with the laboratory.
2. Do not allow the bottle to overflow when filling with sample.
3. Leave a slight headspace in the bottle to allow for expansion of the sample.
4. Cap the bottle securely and tape the cap to prevent it from working loose during shipping.
5. Record the date and time of sampling on the bottle label and ASR form.

For tritium samples—Keep luminescent devices far from sample collection, handling, or storage areas.

5.6.3.I Radon-222

Modify the sample collection setup to collect raw samples for radon analysis. Sample is collected in a glass vial containing liquid-scintillation solution (obtain radon kit from NWQL). Label radon-222 samples as "RUR-SV" and add the laboratory code.

Do not write on or put any labels on the side of the radon vial.

Precautions are needed when collecting samples for radon analyses to prevent introducing gas bubbles into the sample and to prevent the sample from degassing.

- Use insulated sample tubing to prevent warming of the sample.
- Inspect sample tubing to determine whether gas bubbles are forming inside the tubing or whether any air is being drawn into the sample at any connection.
- Dislodge bubbles in sample tubing by striking the tubing firmly with a blunt object.
- Tighten connections to help prevent entrainment of air.
- To reduce degassing during sample collection, create back pressure by partially closing the valve on the radon-collection unit.

1. Collect the radon sample into a syringe directly from the pump discharge or other sampling device.
2. Rinse the syringe as follows: Insert the glass syringe needle through the septum port with the collection-unit valve partially closed. Close the valve further until there is sufficient back pressure to create an almost effortless withdrawal of sample into the syringe. Fill the syringe partially, withdraw it from the septum and invert (needle up). Eject the water to waste. Repeat at least once.
3. With the syringe plunger completely depressed (no air or water in the syringe barrel) and after the final rinse, reinsert the needle through the septum. Withdraw about 15 mL of sample into the syringe barrel slowly; avoid suction and degassing.

4. Withdraw the needle, invert the syringe (needle up), and eject the sample slowly until 10 mL remain in the syringe.
5. Tip the syringe needle downward, and insert the needle tip into the mineral oil and down to the bottom of the radon sample vial.
6. Inject the entire sample slowly. Remove the syringe and cap the vial firmly. Record the date and the exact time of sample collection on the top of the cap (do not write on or put a label on the vial).
7. Shake the vial for 30 seconds after injecting the sample. Repack it in the shipping tube and cap the tube. Complete the ASR form, wrap it around the tube, secure with a rubber band, and place the tube into a sealable plastic bag. **Ship to the NWQL immediately by overnight delivery. Do not ship samples on a Friday. Do not ship radon-222 samples in coolers.**

Do not allow air to contact samples for radon analysis.

Tritium/Helium-3 ($^3H/^3He$) 5.6.3.J

Refer to NWQL Technical Memorandum 97.04S for detailed information and instructions.

Do not allow air to contact samples for $^3H/^3He$ analysis.

Water samples for the helium determination are collected, in duplicate, in special pinch-off copper tubes that hold approximately 40 mL of water. These tubes are supplied through the NWQL but are the property of the analyzing laboratory (Lamont-Doherty Earth Observatory). Unused tubes must be returned to Lamont-Doherty. Notify NWQL of the number of tubes returned.

1. Set up the sampling apparatus. Collect the sample in duplicate. These samples must also be accompanied by 500 mL of sample in a glass or high-density polyethylene bottle for tritium analysis. In addition, archive a duplicate 500-mL sample.
   a. Remove plastic caps covering the ends of the copper tube. **Handle the copper tube with care—damage to the ends from scratches and bends can prevent a good vacuum connection and thus compromise sample integrity.**
   b. Connect the copper tube to the submersible pump discharge tubing.
      - Do not exceed 5 ft between the pump discharge and the sampling apparatus.
      - The connector to the pump-discharge tubing can be plastic, rubber, or metal, but it must be airtight.
      - Clear plastic tubing is preferred to allow visual inspection for possible air bubbles.
      - Airtight connections must not come loose when back pressure is applied during closing of copper tubes. Secure the connections with stainless steel hose clamps, placing clamps approximately 1 in. from the end of the copper tube. (Do not damage ends of copper tube.)
      - Attach a small valve to the discharge end of the copper tube and insert clear plastic (Tygon™) tubing to allow the operators to check for air bubbles (NWQL Technical Memorandum 97.04S provides photographs and diagrams).
2. Begin flow of the sample to the copper tube, checking for bubbles.
   a. Hold the copper tube at a 45-degree angle, discharge up, while flushing bubbles from the system.
   b. Forcibly tap the entire sample tubing and aluminum track that holds the copper tube with a socket wrench or other blunt object to dislodge gas bubbles. This typically takes about 1 minute.
3. Any backpressure to prevent formation of gas bubbles. Close valve until flow is reduced, tap channel, then close completely.
4. Seal the sample container.
   a. Position the copper tube in approximate center of the pinch-off clamp.

b. Use a socket wrench to close the bolts on the pinch-off clamps, starting at the discharge end.

c. Turn the bolts in successive order (back and forth approximately four times until firmly closed) so that the blades of the pinch-off clamp close approximately evenly.

d. Center the copper tube between the blades again, and close the pinch-off clamp on the inflow end as described in step c above.

e. Double check to ensure that all bolts are tight.

5. Repeat procedure above (1–4) to collect a duplicate sample.

6. Disconnect the copper tube from the pump discharge tubing and remove the backpressure valve from the discharge end of the copper tube, taking care not to scratch or otherwise damage the ends.

   a. If the sample is saline, acidic, or otherwise corrosive, wash the ends of the copper tube with DIW.

   b. Take care not to bend the ends of the sealed copper tube.

   c. Do not replace the plastic caps on the ends of the copper tube.

   d. Place label onto the aluminum track of each sample—do not write on the tube. Include station identification, date, and time of sampling on the label.

7. Prepare the sample(s) for shipment. Fill out a form or submit a letter to the analyzing laboratory with the following information:

   - Unique site identification number(s).
   - Date and time of sample collection.
   - Ground-water temperature at time of collection and recharge temperature, if known.
   - Estimated or known tritium concentration.
   - Estimated or known elevation of the recharge area for the sample.
   - General description of the hydrogeologic environment, location, and well-construction information.
   - Information regarding possible tritium contamination of the sample.
   - Name, fax number, E-mail address, and phone number of the person responsible for the sample(s).

5.6.3.K Chlorofluorocarbons (CFC-11, CFC-12, CFC-113)

Chlorofluorocarbons (CFCs) can be analyzed in samples of ground water, surface water, or air. The information that follows is summarized from the Office of Water Quality/Office of Ground Water Technical Memorandum 95.02 and, while generally applicable to all media, is focused toward collection of ground water for CFC analysis. Before collecting CFC samples, review this memorandum for more detailed information on field sampling, site selection, analysis requests, and applications of CFC analyses in environmental investigations. Important information for collecting CFC samples is also provided in Busenberg and Plummer (1992) and Plummer and others (1993).

Do not allow air to contact samples for CFC analysis.

- **The collection, transport, and storage of water samples without contamination is critical in order to reliably age-date waters containing CFCs.**
- Contact the CFC laboratory (USGS, Reston, Va.) to arrange for training and to plan for CFC sampling. Remain in contact with the CFC laboratory throughout the planning, sampling, and analysis phases.

1. Schedule CFC sampling several months in advance, using the CFC request form (fig. 5-4), in order to
    - Reserve the sampling equipment. Special sampling apparatus is loaned to USGS study personnel who will collect water samples for CFC analyses and who have had the training required for CFC sampling.
    - Obtain the required number of borosilicate-glass ampoules (five ampoules per ground-water sample). The borosilicate-glass ampoules are supplied by the USGS CFC laboratory and are included in the price of analysis.
    - Obtain cylinders of compressed ultra-pure nitrogen gas and welding-grade oxygen.

2. Assemble additional tools, materials, and equipment needed (table 5-8; Office of Water Quality/Office of Ground Water Technical Memorandum 95.02).
    - Discuss the type and modification of pumping equipment with the CFC laboratory. USGS personnel should contact the laboratory in Reston, Va., by phone (703-648-5847), fax (703-648-5832), or E-mail (cfc@usgs.gov). The CFC laboratory will provide the guidance needed to prevent cross-contamination of samples collected contemporaneously for CFCs and trace elements.
    - Replace the sample discharge tubing with the appropriate tubing (table 5-8): refrigeration-grade copper or aluminum tubing are recommended; nylon tubing can be used but should be analyzed by the CFC laboratory before use; chromatographic-grade 304 stainless steel tubing also can be used. **Do not use fluorocarbon polymer tubing.**
3. Collect an equipment blank and submit for CFC analysis at least 1 week before collecting environmental samples.
    - For CFC sampling only, the matrix of the blank typically is water collected from a relatively deep well tapping an aquifer recharged only with pre-1940 water.
    - Ship the sample by overnight delivery to the USGS CFC Laboratory in Reston, Va.
    - Review QC-data results and make equipment changes accordingly. Proceed with sampling only if the equipment blanks are clean.
4. Collect preliminary samples for radiochemicals and VOC analyses at the well(s) selected (steps 5a through c below) and review the results before collecting or submitting the samples for CFC analyses. Select wells that are open hole or have metal or threaded (not glued) PVC casing. **Do not submit samples for CFC analyses that contain the following**:
    - Hazardous radioactive substances.
    - More than 0.5 mg/L of any CFC or other halocarbon (vinyl chloride, methyl chloride, methyl chloroform, methyl bromide, methylene chloride, chloroform, trichloroethylene, carbon trichloride, and tetrachloroethylene).

5. Sample collection.
   a. Review sampling plans.
   b. Measure the water level and prepare to purge the well.
   c. Purge the well, recording field measurements for specific electrical conductance, pH, temperature, and dissolved oxygen at approximately 5-minute intervals (NFM 4.2; NFM 6).
      - **The measurement of dissolved-oxygen concentrations is particularly important.**
      - **Record on field forms whether or not a hydrogen sulfide odor is detected.** Collect the samples needed for other organic and inorganic analyses. **Collection of samples for analysis of VOCs and tritium is strongly recommended when collecting samples for CFC analysis.**
   d. Set up the CFC sampling equipment. Replace the sample tubing, if necessary, or make adjustments to direct the sample flow through copper lines or other appropriate tubing.
      - **CFC samples must not come in contact with air.** Use only the CFC apparatus specifically designed for this purpose that is supplied by the CFC Laboratory.
      - Review the precautions listed for radon sampling (section 5.6.3.I) to prevent sample degassing and air contact.
   e. **Collect ground water into a borosilicate-glass ampoule—you will need five ampoules per well**. Flame-seal the ampoule. Repeat for each of the remaining ampoules. (It takes about 5 minutes to collect sample into an ampoule.)
      - Follow the instructions given in training for site evaluation and use of the CFC sampling apparatus.
      - After the last ampoule is filled and sealed, measure specific electrical conductance, pH, temperature, and dissolved oxygen and record the measurements on the field form.

6. Determine, if feasible, concentrations of hydrogen sulfide and methane, tritium/helium-3, and dissolved nitrogen and argon gases.
   a. Measure hydrogen sulfide concentrations (Baedecker and Cozzarelli, 1992) if there is a hydrogen sulfide odor.
   b. Collect sample for tritium/helium-3 age dating.
   c. Collect sample for analysis of dissolved nitrogen and argon gases (to determine temperature of recharge water) and arrange for dissolved gas analyses. USGS personnel should contact the Northeastern Region Common Use Laboratory at (703) 648-6234.
7. Label the sample ampoules as directed by the CFC Laboratory. Pack the ampoules in the boxes supplied by the CFC Laboratory (place padding on top of the ampoules). Be sure to pack the field form (fig. 5-4) in the box with the ampoules.
8. **Ship the CFC samples to arrive the next day,** from Monday through Thursday. Do not ship on a Friday; there must be no weekend overlay of samples.

1 of 2

USGS Chlorofluorocarbon Laboratory

Reston, VA 20192

REQUEST FOR CFC SAMPLING EQUIPMENT AND ANALYSIS

Today's date: _____ Name of contact: _____

Phone: _____ E-Mail: _____

FAX:_____

Description of job (where? project? purpose of CFC dating?):

_____

_____

_____

Shipping Address: _____

_____

_____

_____

_____

Account number for billing:_____

Dates of sampling:_____

When to ship equipment:_____

Date equipment and ampules will be returned to CFC lab:_____

Number of wells: _____

Well/Source: ___monitor; ___domestic; ___municipal; ___spring; ___other

Well diameters: ___2 in.; ___4 in.; ___6 in.; ___other: _____

Range of well depths: _____feet

Materials of well construction: ___PVC; ___metal; ___other

Pump to be used: _____

Figure 5–4. Request form for equipment, instructions, and analysis of chlorofluorocarbon samples.

2 of 2

REQUEST FOR CFC SAMPLING EQUIPMENT AND ANALYSIS, *Continued*

Material of discharge tubing of pump:_____

Equipment normally provided by laboratory includes CFC sampler,

spare parts, CFC trap, ampoules, ampoule holder.

Do you also need:

Garden-hose connector to well? ____

Other? _____

Are dissolved gases to be sampled? ____ Contact 703-648-6234 or

E-mail cfc@usgs.gov).

Which gases? _____

How many?_____

Will surface water be collected for CFC analysis? ____

How many samples and (or) stations? _____

Will air samples be collected for CFC analysis? ____

How many samples and (or) stations? _____

Do you need training on CFC sampling procedures? ___yes; ___no

Do you need the CFC laboratory to send personnel to help with training or

sampling? ___yes; ___ no

Contacts and address for Reston CFC laboratory:

U.S. Geological Survey
432 National Center
12201 Sunrise Valley Drive
Reston, VA 20192

E-Mail: cfc@usgs.gov
Phone: 703-648-5838
FAX: 703-648-5832

Figure 5–4. Request form for equipment, instructions, and analysis of chlorofluorocarbon samples—*Continued.*

Table 5-8. Equipment and supplies used for collection of samples for chlorofluorocarbon analysis

[CFC, chlorofluorocarbon; %, percent; MAPP, methyl acetylene-propadiene + petroleum gas (liquefied); QW Tech Memo, Office of Water Quality Technical Memorandum 95.02]

Item	Description	Source
CFC sample apparatus and ampoules	Refer to Busenberg and Plummer (1992). Return unused ampoules to the laboratory. Check with CFC laboratory for pump type, fittings, and special connectors needed.	CFC Laboratory, USGS, MS 432, Reston, VA 20192 or E-mail cfc@usgs.gov
Field gases		Hardware or plumbing supplies
Ultra-pure nitrogen	Two C-size tanks. Carrier grade 99.999% pure or better; one tank is used for backup.	
Welding-grade oxygen	One C-size or two D-size tanks; or, cannisters for welding kit.	
MAPP gas or propane	Fuel gas, provided in a fully gaseous state.	
Sample tubing, fittings[1]		Plumbing supplies. For aluminum tubing, refer to QW Tech Memo 95.02
Copper, aluminum, or stainless steel	1/4-inch, refrigeration grade. Stainless steel: use chromatographic 304 grade.	
Compression fittings (such as Swagelok)	1/4-inch, preclean to remove lubricating oils or special order without lubricating oils.	Hardware supplies, or special order
Nylon[1] (copper or aluminum are preferred)	1/4-inch tubing; preclean as described for inorganic-constituent samples in NFM 3.	Scientific suppliers
Torch and regulator equipment		Hardware suppliers
Welding kit (refer to description in QW Tech Memo 95.02	Example: Bernzomatic™ Model OX2500 or equivalent (contains torch, hoses, valves for canisters of oxygen and fuel gases, spark igniter).	If kit will not be used, have welding supplies assembled by a welding equipment store.
Oxygen regulator	Recommended for oxygen line.	
Field tools		Hardware suppliers
Wrenches, adjustable	12 inch (for attaching regulators to gas cylinders). 6-inch (for attaching gas and water lines). Allen wrench set (for sampler repairs).	
Pliers	Needle-nose and standard.	
Screwdrivers	Phillips and standard.	
Tubecutter	For 1/8-inch and 1/4-inch tubing.	
Tape	Fluorocarbon polymer (PTFE) and electrical.	
Spark igniter	To light torch.	
Wash bottle	250 milliliter (for water to clean off sampler).	
Metal file	To smooth the cut edges of metal tubing.	

[1]**Materials not suitable for tubing:** Tygon, silicone rubber, most plastics (including fluorocarbon polymers), rubbers. Use only refrigeration-grade copper or aluminum tubing, as other grades have oil coatings inside. If using nylon tubing, send it to the CFC laboratory for analysis to confirm that it does not contain substances that might affect CFC analysis.

CONVERSION FACTORS, SELECTED TERMS, ABBREVIATIONS, AND CHEMICAL FORMULAS

CONVERSION FACTORS

Multiply	By	To obtain
micrometer (µm)	0.00003937	inch
millimeter (mm)	0.03937	inch
centimeter (cm)	0.3937	inch
microliter (µL)	0.0000338	ounce, fluid
milliliter (mL)	0.0338	ounce, fluid
	0.000264	gallon
liter (L)	0.2642	gallon
nanogram (ng)	3.53×10^{-11}	ounce
microgram (µg)	3.53×10^{-8}	ounce
milligram (mg)	0.0000353	ounce
gram (g)	0.03527	ounce, avoirdupois
kilopascal	0.1450	pound per square inch
picocurie (pCi)	0.037	Becquerle (Bq)

Temperature: Water and air temperature are given in degrees Celsius (°C), which can be converted to degrees Fahrenheit (°F) by use of the following equation:

$$°F = 1.8(°C) + 32$$

Selected Terms

Editors and authors of the *National Field Manual* have attempted to use terms common in the water-quality community. Some of the terms used have restricted meanings within the context of this report. The following terms either are used in a context familiar primarily to USGS personnel, or in a format that is more succinct, or that is considered to be more specific than a common usage:

Accuracy: The degree of agreement of a measured value with the true or expected value (from Taylor, 1987).

Analyte (target analyte): "Substances being determined in an analysis" (from Bennett, 1986). The term target analyte is used in this report to refer to any chemical or biological substance for which concentrations in a sample will be determined. The definition for target analyte does not include field-measured parameters such as temperature, specific electrical conductance, pH, dissolved oxygen, Eh, alkalinity, color, or turbidity.

Bias: Systematic error inherent in a method or caused by some artifact or idiosyncrasy of the sample measurement, collection, or processing system. The error can be positive (indicating contamination) or negative (indicating loss of analyte concentration) (from Taylor, 1987).

Contaminant: Biological or chemical substances added to the medium of concern, commonly through human activity.

Contamination (of water): Change of ambient water composition by the addition of biological or chemical substances as a result of human activity or natural processes. Addition of such substances can be detrimental to the quality of the water resource.

Data-quality requirements: The subset of data-quality objectives pertaining specifically to the analytical detection level for concentrations of target analytes and the variability allowable to fulfill the scientific objectives of the study.

Quality Assurance (QA): The systematic management of data-collection systems by using prescribed guidelines and criteria for implementing technically approved methods and policies. Quality assurance incorporates a comprehensive plan that outlines the overall process for providing a product or service that will satisfy the given requirements for quality.

Quality Control (QC): The specific operational techniques and activities used to obtain the required quality of data. Quality control consists of the application of technical procedures to achieve prescribed standards of performance and to document the quality of collected data. Quality-control data are used to identify and evaluate any corrective actions necessary to improve performance or data interpretation to acceptable levels.

Trace element(s): For the purpose of this report and to maintain consistency with common usage, the term trace element(s) is used to refer to metal and nonmetal inorganic elements such as arsenic, antimony, selenium, and tellurium that usually are present in natural surface-water and ground-water systems in concentrations less than 1 mg/L (modified from Hem, 1985). Common usage of this term, as defined above, is inexact and not rigorous with respect to aqueous chemistry.

Abbreviations

cc	cubic centimeter
lb/in^2	pounds per square inch
min	minute
mg/L	milligram per liter

µg/L	microgram per liter (equivalent to parts per billion (ppb))
mL/min	milliliters per minute
ng/L	nanogram per liter
ng/µL	nanogram per microliter
pCi	picocuries
ppb	parts per billion (see µg/L)
ANC	acid neutralizing capacity
ASR	Analytical Services Request
BNA	base-neutral acids
CFC	chlorofluorocarbon
CH	Clean Hands
DH	Dirty Hands
DIC	dissolved inorganic carbon
DIW	distilled/deionized water
DOC	dissolved organic carbon
FA	filtered, acidified sample
FAM	filtered, acidified sample for analysis of mercury
FAR	filtered, acidified sample for analyses of selected radiochemicals
FCA	filtered, chilled, acidified sample
FCC	filtered, chilled sample
FEP	fluorinated ethylene-propylene
FU	filtered, untreated sample
GCC	glass, chilled sample for analysis of nonvolatile organic compounds
GC/MS	gas chromatograph/mass spectrophotometer
IBW	inorganic-grade blank water (water with certified analysis of trace elements and other inorganic constituents and used for blank QC samples for analysis of inorganic constituents)
MBAS	methylene blue active substances
NAWQA	National Water-Quality Assessment Program
NFM	*National Field Manual for the Collection of Water-Quality Data*
NPDES	National Pollutant Discharge Elimination System
NWQL	National Water Quality Laboratory of the U.S. Geological Survey (Denver, Colo.)
OWQ	Office of Water Quality of the U.S. Geological Survey (Reston, Va.)
PBW	pesticide-grade blank water (water certified free of pesticide compounds)
PCB	polychlorinated biphenyl
QA	quality assurance
QC	quality control

QW	quality of water
QWSU	Quality of Water Service Unit of the U.S. Geological Survey (Ocala, Fla.)
RA	raw, acidified sample
RAH	raw, acidified sample for analysis of antimony, arsenic, and (or) selenium
RAM	raw, acidified sample for analysis of mercury
RCB	raw, chilled sample
RU	raw, untreated sample
RUR	raw, untreated sample for analysis of selected radiochemicals
RUS	raw, untreated sample for analysis of stable isotopes
SOC	suspended organic carbon
SPE	solid-phase extraction
TOC	total organic carbon
URL	Uniform Resource Locator
USEPA	U.S. Environmental Protection Agency
USGS	U.S. Geological Survey
VBW	volatile-organic-compounds-grade blank water (water certified free of VOCs)
VOC	volatile organic compounds
WCA	raw, chilled, acidified nutrient sample

Chemical Formulas

Ag_2S	silver sulfide
$AgNO_3$	silver nitrate
$BaSO_4$	barium sulfate
$^{13}C/^{12}C$	carbon-13/carbon-12 isotope ratio
^{14}C	carbon-14
$CuSO_4$	copper sulfate
$^{2}H/^{1}H$	deuterium/protium isotope ratio
$^{3}H/^{3}He$	tritium/helium-3 isotope ratio
HCl	hydrochloric acid

H_2O	water
H_2S	hydrogen sulfide
H_2SO_4	sulfuric acid
H_3PO_4	phosphoric acid
HNO_3	nitric acid
$HNO_3/K_2Cr_2O_7$	nitric acid/potassium dichromate
NaCl	sodium chloride
NaOH	sodium hydroxide
$^{15}N/^{14}N$	nitrogen-15/nitrogen-14 isotope ratio
$^{18}O/^{16}O$	oxygen-18/oxygen-16 isotope ratio
$^{34}S/^{32}S$	sulfur-34/sulfur-32 isotope ratio
$SrCl_2$	strontium chloride

SELECTED REFERENCES AND INTERNAL DOCUMENTS

SELECTED REFERENCES FOR PROCESSING OF WATER SAMPLES

American Public Health Association, American Water Works Association, and Water Environment Federation, 1992, Standard methods for the examination of water and wastewater (18th ed.): Washington, D.C., American Public Health Association, variously paged.

Baedecker, M.J., and Cozzarelli, I.M., 1992, The determination and fate of unstable constituents of contaminated groundwater, *in* Lesage, Suzanne, and Jackson, R.E., eds., 1992, Groundwater contamination and analysis at hazardous waste sites: New York, Marcel Dekker, p. 425-461.

Bennett, H., ed., 1986, Concise chemical and technical dictionary (4th ed.): New York, Chemical Publishing Co., p. 99.

Burkhardt, M.R., Kammer, J.A., Jha, V.K, Omara-Lopez, P.G., and Woodworth, M.T., 1997, Methods of analysis by the U.S. Geological Survey National Water Quality Laboratory—Determination of nonpurgeable suspended organic carbon by wet-chemical oxidation and infrared spectrometry: U.S. Geological Survey Open-File Report 97-380, 33 p.

Busenberg, Eurybiades, and Plummer, L.N., 1992, Use of chlorofluorocarbons (CCl_3F and CCl_2F_2) as hydrologic tracers and age-dating tools—Example, The alluvium and terrace system of central Oklahoma: Water Resources Research, v. 28, no. 9, p. 2257-2283.

Capel, P.D., and Larson, S.J., 1996, Evaluation of selected information on splitting devices for water samples: U.S. Geological Survey Water-Resources Investigations Report 95-4141, 103 p.

Capel, P.D., Nacionales, F.C., and Larson, S.J., 1995, Precision of a splitting device for water samples: U.S. Geological Survey Open-File Report 95-293, 6 p.

Carmody, R.W., Plummer, L.N., Busenberg, Eurybiades, and Coplen, T.B., 1998, Methods for collection of dissolved sulfate and sulfide and analysis of their sulfur isotopic composition: U.S. Geological Survey Open-File Report 97-234, 91 p.

Edwards, T.K., and Glysson, G.D., 1998, Field methods for measurement of fluvial sediment: U.S. Geological Survey Techniques of Water-Resources Investigations, book 3, chap. C2, 80 p.

Gibs, Jacob, and Imbrigiotta, T.E., 1990, Well-purging criteria for sampling purgeable organic compounds: Ground Water, v. 28, no. 1, p 68-78.

Horowitz, A.J., Demas, C.R., Fitzgerald, K.K., Miller, T.L., and Rickert, D.A., 1994, U.S. Geological Survey protocol for the collection and processing of surface-water samples for the subsequent determination of inorganic constituents in filtered water: U.S. Geological Survey Open-File Report 94-539, 57 p.

Horowitz, A.J., Elrick, K.A., and Colberg, M.R., 1992, The effect of membrane filtration artifacts on dissolved trace element concentrations: Water Resources, v. 26, no. 6, p. 753-763.

Keith, L.H., ed., 1988, Principles of environmental sampling: Washington, D.C., American Chemical Society, 458 p.

Keith, L.H., ed., 1991, Compilation of EPA's sampling and analysis methods: Chelsea, Mich., Lewis Publishers, 803 p.

Keith, L.H., Crummett, W., Deegan, J., Libby, R.A., Taylor, J.K., and Wentler, G., 1983, Principles of environmental analysis: Analytical Chemistry, v. 55, p. 2210-2218.

Kennedy, V.C., Jenne, E.A., and Burchard, J.M., 1976, Backflushing filters for field processing of water samples prior to trace-element analyses: U.S. Geological Survey Water-Resources Investigations Report 76-126, 12 p.

Koterba, M.T., Wilde, F.D., and Lapham, W.W., 1995, Ground-water data-collection protocols and procedures for the National Water-Quality Assessment Program—collection and documentation of water-quality samples and related data: U.S. Geological Survey Open-File Report 95-399, 113 p.

Lapham, W.W., Wilde, F.D., and Koterba, M.T., 1997, Guidelines and standard procedures for studies of ground-water quality—selection and installation of wells, and supporting documentation: U.S. Geological Survey Water-Resources Investigations Report 96-4233, 110 p.

Lindley, C.E., Stewart, J.T., and Sandstrom, M.W., 1996, Determination of low concentrations of acetochlor in water by automated solid-phase extraction and gas chromatography with mass-selective detection: Journal of AOAC International, v. 79, no. 4, p. 962-966.

Manning, T.K., Smith, K.E., Wood, C.D., and Williams, J.B., 1994, Pesticide-sampling equipment, sample-collection and processing procedures, and water-quality data at Chicod Creek, North Carolina, 1992: U.S. Geological Survey Open-File Report 94-50, 35 p.

McCarthy, J.F., 1988, Mobility of colloidal particles in the subsurface—chemistry and hydrology of colloid-aquifer interactions: Oak Ridge, Tenn., Oak Ridge National Laboratory, 111 p.

McCarthy, J.F., and Zachara, J.M., 1989, Subsurface transport of contaminants: Environmental Science and Technology, v. 5, no. 23, p. 496-502.

Norris, J., 1988, Techniques for sampling surface and industrial waters—special considerations and choices, *in* Keith, L.H., ed., Principles of environmental sampling: Washington, D.C., American Chemical Society, p. 247-253.

Plummer, L.N., Michel, R.L., Thurman, E.M., and Glynn, P.D., 1993, Environmental tracers for age dating young ground water, *in* Alley, W.M., ed., Regional ground-water quality, chap. 11: New York, Van Nostrand Reinhold, p. 255-294.

Puls, R.W., and Barcelona, M.J., 1989, Ground water sampling for metals analyses: Washington, D.C., U.S. Environmental Protection Agency, Office of Research and Development, EPA Ground Water Issue, EPA/540/4-89/001, 6 p.

Robards, Kevin, McKelvie, I.D., Benson, R.L., Worsfold, P.J., Blundell, N.J., and Casey, Harry, 1994, Determination of carbon, phosphorus, nitrogen and silicon species in waters: Analytica Chemica Acta, v. 287, p. 147-190.

Salonen, Kalevi, 1979, Comparison of different glass fibre and silver metal filters for the determination of particulate organic carbon: Hydrobiologia, v. 67, p. 29-32.

Sandstrom, M.W., 1990, Sampling requirements for organic contaminants, *in* American Water Works Association Annual Conference: Cincinnati, Ohio, Management Challenges of New Monitoring Requirements for Organic Chemicals, American Water Works Association Seminar Proceedings, p. 71-85.

Sandstrom, M.W., 1995, Filtration of water-sediment samples for the determination of organic compounds: U.S. Geological Survey Water-Resources Investigations Report 95-4105, 13 p.

Sandstrom, M.W., Wyodoski, D.S., Schroeder, M.P., Zamboni, J.L., and Foreman, W.T., 1992 [1994], Methods of analysis by the U.S. Geological Survey National Water Quality Laboratory—determination of organonitrogen herbicides in water by solid-phase extraction and capillary-column gas chromatography/mass spectrometry with selected-ion monitoring: U.S. Geological Survey Open-File Report 91-519, 26 p.

Shelton, L.R., 1994, Field guide for collecting and processing stream-water samples for the National Water-Quality Assessment Program: U.S. Geological Survey Open-File Report 94-455, 42 p.

Taylor, J.K., 1987, Quality assurance of chemical measurements: Chelsea, Mich., Lewis Publishers, 328 p.

Timme, P.J., 1995, National Water Quality Laboratory 1995 services catalog: U.S. Geological Survey Open-File Report 95-352, 120 p.

U.S. Environmental Protection Agency, 1980, Samplers and sampling procedures for hazardous waste stream: EPA 600/2-80-018, 70 p.

_____1982a, Sampling protocols for collecting surface water, bed sediment, bivalves, and fish for priority pollutant analysis: Washington, D.C., Final Draft Report, Office of Water Regulations and Standards Monitoring and Data Support Division, EPA 68-01-6195, variously paged.

_____1982b, Handbook for sampling and sample preservation of water and wastewater: Cincinnati, Ohio, Environment Monitoring and Support Laboratory, EPA 600/4-82-029, 402 p.

_____1983, Addendum to Handbook for sampling and sample preservation of water and wastewater: Environment Monitoring and Support Laboratory, Cincinnati, Ohio, EPA 600/4-82-029, 28 p.

_____1987, A compendium of Superfund field operations methods: Washington, D.C., Office of Emergency and Remedial Response, EPA/540-P-87/001, 508 p.

U.S. Geological Survey, 1984, Chemical and physical quality of water and sediment, chap. 5 *in* U.S. Geological Survey, National handbook of recommended methods for water-data acquisition: p. 5-1 to 5-194.

Ward, J.R., and Harr, C.A., eds., 1990, Methods for collection and processing of surface-water and bed-material samples for physical and chemical analyses: U.S. Geological Survey Open-File Report 90-140, 71 p.

Wells, F.C., Gibbons, W.J., and Dorsey, M.E., 1990, Guidelines for collection and field analysis of water-quality samples from streams in Texas: U.S. Geological Survey Open-File Report 90-127, 79 p.

Werner, S.L., Burkhardt, M.R., and DeRusseau, S.N., 1996, Methods of analysis by the U.S. Geological Survey National Water Quality Laboratory—determination of pesticides in water by Carbopak-B solid-phase extraction and high-performance liquid chromatography: U.S. Geological Survey Open-File Report 96-216, 42 p.

Williams, P.M., Bauer, J.E., Robertson, K.J., Wolgast, D.M., and Occelli, M.L., 1993, Report on DOC and DON measurements made at Scripps Institution of Oceanography, 1988-1991: Marine Chemistry, v. 41, p. 271-281.

Zaugg, S.D., Sandstrom, M.W., Smith, S.G., and Fehlberg, K.M., 1995, Methods of analysis by the U.S. Geological Survey National Water Quality Laboratory—determination of pesticides in water by C-18 solid-phase extraction and capillary-column gas chromatography/mass spectrometry with selected-ion monitoring: U.S. Geological Survey Open-File Report 95-181, 49 p.

Internal Documents

Office of Water Quality and National Water Quality Laboratory technical memorandums are available through the USGS Home Page on the World Wide Web. The site address (URL) is http://water.usgs.gov/lookup/get?techmemo.

Memo No.	Title	Date
	Water Quality	

qw92.01	Distilled/Deionized Water for District Operations	December 20, 1991
qw92.02	FIELD TECHNIQUES--Field Preparation of Containers for Aqueous Samples	December 20, 1991
qw92.06	Report of Committee on Sample Shipping Integrity and Cost	March 20, 1992
qw92.11	FIELD TECHNIQUES--Return of Spent Mercury and Dichromate Ampoules to the National Water Quality Laboratory	July 16, 1992
qw94.09	Revision of New Division Protocol for Collecting and Processing Surface-Water Samples for Low-Level Inorganic Analyses	January 28, 1994
qw94.16	New Preservation Techniques for Nutrient Samples	August 5, 1994
qw95.02*	Establishment of U.S. Geological Survey (USGS) Laboratory for Determination of Chlorofluorocarbons (CFCs) in Air and Water Samples	December 29, 1994
qw97.03	Protocols for Cleaning a Teflon Cone Splitter to Produce Contaminant-Free Subsamples for Subsequent Determinations of Trace Elements	February 7, 1997
qw97.06	Comparison of the Suspended-Sediment Splitting Capabilities of the Churn and Cone Splitters	May 5, 1997
qw99.04	Changes in Field Treatment Protocols and Bottle Types for Whole-Water Samples Collected for Total Ammonium Plus Organic Nitrogen and Total Phosphorus Determinations	November 25, 1998

*95.02 was prepared jointly by the Office of Water Quality and the Office of Ground Water.

Memo No.	Title	Date
	National Water Quality Laboratory	
92.01	Technology Transfer. Availability of Equipment Blank Water for Inorganic & Organic Analyses	March 25, 1992
92.04	Bottles for Tritium Analyses	August 12, 1992
93.01	Identification of Low Levels of Sodium Contamination in Nitric Acid Samples	October 5, 1992
93.09	Radon—Discontinuance of Duplicate Samples for Radon-In-Water	August 24, 1993
95.04	Shipping Samples to the National Water Quality Laboratory	December 2, 1994
95.05	Nitrogen Isotope Sample Preservation for Water Samples	March 8, 1995
96.05	Collection, Processing, and Analysis of Carbon Isotope Samples	April 5, 1996
97.01 97.01S	Use of Syringes to Add Volatile Organic Compounds to Water Samples for Use as Matrix Spike Samples (97.01S is supplementary)	November 5, 1996
97.04S	Collection, Processing, and Analysis of Ground-Water Samples for Tritium/Helium-3 Dating	April 7, 1997
97.05	Using the National Water Quality Laboratory for the Analysis of Drinking Water Samples	February 28, 1997

PUBLICATIONS ON TECHNIQUES OF WATER-RESOURCES INVESTIGATIONS

The U.S. Geological Survey publishes a series of manuals describing procedures for planning and conducting specialized work in water-resources investigations. The material is grouped under major subject headings called books and is further divided into sections and chapters. For example, Section A of Book 9 (Handbooks for Water-Resources Investigations) pertains to collection of water-quality data. The chapter, which is the unit of publication, is limited to a narrow field of subject matter. This format permits flexibility in revision and publication as the need arises.

The Techniques of Water-Resources Investigations (TWRI) reports listed below are for sale by the U.S. Geological Survey, Branch of Information Services, Box 25286, Federal Center, Denver, CO 80225 (authorized agent of the Superintendent of Documents, Government Printing Office). Prepayment is required. Remittance should be sent by check or money order payable to the U.S. Geological Survey. Prices are not included because they are subject to change. Current prices can be obtained by writing to the above address. When ordering or inquiring about prices for any of these publications, please give the title, book number, chapter number, and "U.S. Geological Survey Techniques of Water-Resources Investigations." An updated list of TWRI reports can be found by accessing the World Wide Web url: http://water.usgs.gov/lookup/get?TWRI.

Book 1. Collection of Water Data by Direct Measurement

Section D. Water Quality

1–D1.Water temperature—influential factors, field measurement, and data presentation, by H.H.þStevens, Jr., J.F. Ficke, and G.F. Smoot: USGS—TWRI Book 1, Chapter D1. 1975. 65þpages.

1–D2.Guidelines for collection and field analysis of ground-water samples for selected unstable constituents, by W.W. Wood: USGS—TWRI Book 1, Chapter D2. 1976. 24 pages.

Book 2. Collection of Environmental Data

Section D. Surface Geophysical Methods

2–D1.Application of surface geophysics to ground-water investigations, by A.A.R. Zohdy, G.P. Eaton, and D.R. Mabey: USGS—TWRI Book 2, Chapter D1. 1974. 116 pages.

2–D2.Application of seismic-refraction techniques to hydrologic studies, by F.P. Haeni: USGS—TWRI Book 2, Chapter D2. 1988. 86 pages.

Section E. Subsurface Geophysical Methods

2–E1.Application of borehole geophysics to water-resources investigations, by W.S. Keys and L.M.þMacCary: USGS—TWRI Book 2, Chapter E1. 1971. 126 pages.

2–E2.Borehole geophysics applied to ground-water investigations, by W.S. Keys: USGS—TWRI Book 2, Chapter E2. 1990. 150 pages.

Section F. Drilling and Sampling Methods

2–F1.Application of drilling, coring, and sampling techniques to test holes and wells, by Eugene Shuter and W.E. Teasdale: USGS—TWRI Book 2, Chapter F1. 1989. 97 pages.

Book 3. Applications of Hydraulics

Section A. Surface-Water Techniques

3–A1.General field and office procedures for indirect discharge measurements, by M.A. Benson and Tate Dalrymple: USGS—TWRI Book 3, Chapter A1. 1967. 30 pages.

3–A2.Measurement of peak discharge by the slope-area method, by Tate Dalrymple and M.A. Benson: USGS—TWRI Book 3, Chapter A2. 1967. 12 pages.

3–A3.Measurement of peak discharge at culverts by indirect methods, by G.L. Bodhaine: USGS—TWRI Book 3, Chapter A3. 1968. 60 pages.

3–A4.Measurement of peak discharge at width contractions by indirect methods, by H.F. Matthai: USGS—TWRI Book 3, Chapter A4. 1967. 44 pages.

3–A5.Measurement of peak discharge at dams by indirect methods, by Harry Hulsing: USGS—TWRI Book 3, Chapter A5. 1967. 29 pages.

3–A6.General procedure for gaging streams, by R.W. Carter and Jacob Davidian: USGS—TWRI Book 3, Chapter A6. 1968. 13 pages.

3–A7.Stage measurement at gaging stations, by T.J. Buchanan and W.P. Somers: USGS—TWRI Book 3, Chapter A7. 1968. 28 pages.

3–A8.Discharge measurements at gaging stations, by T.J. Buchanan and W.P. Somers: USGS—TWRI Book 3, Chapter A8. 1969. 65 pages.

3–A9.Measurement of time of travel in streams by dye tracing, by F.A. Kilpatrick and J.F. Wilson, Jr.: USGS—TWRI Book 3, Chapter A9. 1989. 27 pages.

3–Al0.Discharge ratings at gaging stations, by E.J. Kennedy: USGS—TWRI Book 3, Chapter A10. 1984. 59 pages.

3–A11.Measurement of discharge by the moving-boat method, by G.F. Smoot and C.E. Novak: USGS—TWRI Book 3, Chapter A11. 1969. 22 pages.

3–A12.Fluorometric procedures for dye tracing, Revised, by J.F. Wilson, Jr., E.D. Cobb, and F.A. Kilpatrick: USGS—TWRI Book 3, Chapter A12. 1986. 34 pages.

3–A13.Computation of continuous records of streamflow, by E.J. Kennedy: USGS—TWRI Book 3, Chapter A13. 1983. 53 pages.

3–A14.Use of flumes in measuring discharge, by F.A. Kilpatrick and V.R. Schneider: USGS—TWRI Book 3, Chapter A14. 1983. 46 pages.

3–A15.Computation of water-surface profiles in open channels, by Jacob Davidian: USGS—TWRI Book 3, Chapter A15. 1984. 48 pages.

3–A16.Measurement of discharge using tracers, by F.A. Kilpatrick and E.D. Cobb: USGS—TWRI Book 3, Chapter A16. 1985. 52 pages.

3–A17.Acoustic velocity meter systems, by Antonius Laenen: USGS—TWRI Book 3, Chapter A17. 1985. 38 pages.

3–A18.Determination of stream reaeration coefficients by use of tracers, by F.A. Kilpatrick, R.E.þRathbun, Nobuhiro Yotsukura, G.W.þParker, and L.L. DeLong: USGS—TWRI Book 3, Chapter A18. 1989. 52 pages.

3–A19.Levels at streamflow gaging stations, by E.J. Kennedy: USGS—TWRI Book 3, Chapter A19. 1990. 31 pages.

3–A20.Simulation of soluble waste transport and buildup in surface waters using tracers, by F.A. Kilpatrick: USGS—TWRI Book 3, Chapter A20. 1993. 38 pages.

3–A21.Stream-gaging cableways, by C. Russell Wagner: USGS—TWRI Book 3, Chapter A21. 1995. 56 pages.

Section B. Ground-Water Techniques

3–B1. Aquifer-test design, observation, and data analysis, by R.W. Stallman: USGS—TWRI Book 3, Chapter B1. 1971. 26 pages.

3–B2.Introduction to ground-water hydraulics, a programed text for self-instruction, by G.D. Bennett: USGS—TWRI Book 3, Chapter B2. 1976. 172 pages.

3–B3.Type curves for selected problems of flow to wells in confined aquifers, by J.E. Reed: USGS—TWRI Book 3, Chapter B3. 1980. 106 pages.

3–B4.Regression modeling of ground-water flow, by R.L. Cooley and R.L. Naff: USGS—TWRI Book 3, Chapter B4. 1990. 232 pages.

3–B4.Supplement 1. Regression modeling of ground-water flow—Modifications to the computer code for nonlinear regression solution of steady-state ground-water flow problems, by R.L. Cooley: USGS—TWRI Book 3, Chapter B4. 1993. 8 pages.

3–B5.Definition of boundary and initial conditions in the analysis of saturated ground-water flow systems—An introduction, by O.þL.þFranke, T.E. Reilly, and G.D. Bennett: USGS—TWRI Book 3, Chapter B5. 1987. 15 pages.

3–B6.The principle of superposition and its application in ground-water hydraulics, by T.E. Reilly, O.L.þFranke, and G.D.þBennett: USGS—TWRI Book 3, Chapter B6. 1987. 28 pages.

3–B7.Analytical solutions for one-, two-, and three-dimensional solute transport in ground-water systems with uniform flow, by E.J. Wexler: USGS—TWRI Book 3, Chapter B7. 1992. 190 pages.

Section C. Sedimentation and Erosion Techniques

3–C1.Fluvial sediment concepts, by H. P. Guy: USGS—TWRI Book 3, Chapter C1. 1970. 55 pages.

3–C2.Field methods for measurement of fluvial sediment, by T.K. Edwards and G.D. Glysson: USGS—TWRI Book 3, Chapter C2. 1998. 80 pages.

3–C3.Computation of fluvial-sediment discharge, by George Porterfield: USGS—TWRI Book 3, ChapterþC3. 1972. 66 pages.

Book 4. Hydrologic Analysis and Interpretation

Section A. Statistical Analysis

4–A1.Some statistical tools in hydrology, by H.C. Riggs: USGS—TWRI Book 4, Chapter A1. 1968. 39þpages.

4–A2.Frequency curves, by H.C. Riggs: USGS—TWRI Book 4, Chapter A2. 1968. 15 pages.

Section B. Surface Water

4–B1.Low-flow investigations, by H.C. Riggs: USGS—TWRI Book 4, Chapter B1. 1972. 18 pages.

4–B2.Storage analyses for water supply, by H.C. Riggs and C.H. Hardison: USGS—TWRI Book 4, Chapter B2. 1973. 20 pages.

4–B3.Regional analyses of streamflow characteristics, by H.C. Riggs: USGS—TWRI Book 4, ChapterþB3. 1973. 15 pages.

Section D. Interrelated Phases of the Hydrologic Cycle

4–D1.Computation of rate and volume of stream depletion by wells, by C.T. Jenkins: USGS—TWRI Bookþ4, Chapter D1. 1970. 17 pages.

Book 5. Laboratory Analysis

Section A. Water Analysis

5–A1.Methods for determination of inorganic substances in water and fluvial sediments, by M.J.þFishman and L.C. Friedman, editors: USGS—TWRI Book 5, Chapter A1. 1989. 545 pages.

5–A2.Determination of minor elements in water by emission spectroscopy, by P.R. Barnett and E.C.þMallory, Jr.: USGS—TWRI Book 5, Chapter A2. 1971. 31 pages.

5–A3.Methods for the determination of organic substances in water and fluvial sediments, edited by R.L. Wershaw, M.J.þFishman, R.R. Grabbe, and L.E. Lowe: USGS—TWRI Book 5, Chapter A3. 1987. 80 pages.

5–A4.Methods for collection and analysis of aquatic biological and microbiological samples, by L.J.þBritton and P.E. Greeson, editors: USGS—TWRI Book 5, Chapter A4. 1989. 363 pages.

5–A5.Methods for determination of radioactive substances in water and fluvial sediments, by L.L.þThatcher, V.J. Janzer, and K.W.þEdwards: USGS—TWRI Book 5, Chapter A5. 1977. 95þpages.

5–A6.Quality assurance practices for the chemical and biological analyses of water and fluvial sediments, by L.C. Friedman and D.E. Erdmann: USGS—TWRI Book 5, Chapter A6. 1982. 181þpages.

Section C. Sediment Analysis

5–C1.Laboratory theory and methods for sediment analysis, by H. P. Guy: USGS—TWRI Book 5, ChapterþC1. 1969. 58 pages.

Book 6. Modeling Techniques

Section A. Ground Water

6–A1.A modular three-dimensional finite-difference ground-water flow model, by M.G. McDonald and A.W. Harbaugh: USGS—TWRI Book 6, Chapter A1. 1988. 586 pages.

6–A2.Documentation of a computer program to simulate aquifer-system compaction using the modular finite-difference ground-water flow model, by S.A. Leake and D.E. Prudic: USGS—TWRI Book 6, Chapter A2. 1991. 68 pages.

6–A3.A modular finite-element model (MODFE) for areal and axisymmetric ground-water-flow problems, Part 1: Model Description and User's Manual, by L.J. Torak: USGS—TWRI Book 6, Chapter A3. 1993. 136 pages.

6–A4.A modular finite-element model (MODFE) for areal and axisymmetric ground-water-flow problems, Part 2: Derivation of finite-element equations and comparisons with analytical solutions, by R.L. Cooley: USGS—TWRI Book 6, Chapter A4. 1992. 108 pages.

6–A5.A modular finite-element model (MODFE) for areal and axisymmetric ground-water-flow problems, Part 3: Design philosophy and programming details, by L.J. Torak: USGS—TWRI Book 6, Chapter A5, 1993. 243 pages.

6–A6.A coupled surface-water and ground-water flow model (MODBRANCH) for simulation of stream-aquifer interaction by E.D. Swain and Eliezer J. Wexler: USGS—TWRI Book 6, Chapter A6, 1996. 125 pages.

Book 7. Automated Data Processing and Computations

Section C. Computer Programs

7–C1.Finite difference model for aquifer simulation in two dimensions with results of numerical experiments, by P.C. Trescott, G.F.þPinder, and S.P. Larson: USGS—TWRI Book 7, Chapter C1. 1976. 116 pages.

7–C2.Computer model of two-dimensional solute transport and dispersion in ground water, by L.F.þKonikow and J.D.þBredehoeft: USGS—TWRI Book 7, Chapter C2. 1978. 90 pages.

7–C3.A model for simulation of flow in singular and interconnected channels, by R.W. Schaffranek, R.A.þBaltzer, and D.E.þGoldberg: USGS—TWRI Book 7, Chapter C3. 1981. 110 pages.

Book 8. Instrumentation

Section A. Instruments for Measurement of Water Level

8–A1.Methods of measuring water levels in deep wells, by M.S. Garber and F.C. Koopman: USGS—TWRI Book 8, Chapter A1. 1968. 23 pages.

8–A2.Installation and service manual for U.S. Geological Survey manometers, by J.D. Craig: USGS—TWRI Book 8, Chapter A2. 1983. 57 pages.

Section B. Instruments for Measurement of Discharge

8–B2.Calibration and maintenance of vertical-axis type current meters, by G.F. Smoot and C.E. Novak: USGS—TWRI Book 8, Chapter B2. 1968. 15 pages.

Book 9. Handbooks for Water-Resources Investigations

Section A. National Field Manual for the Collection of Water-Quality Data

9–A1.Preparations for water sampling, by F.D. Wilde, D.B. Radtke, Jacob Gibs, and R.T. Iwatsubo: USGS—TWRI Book 9, Chapter A1. 1998. Variously paged.

9–A2.Selection of equipment for water sampling, by F.D. Wilde, D.B. Radtke, Jacob Gibs, and R.T. Iwatsubo, editors: USGS—TWRI Book 9, Chapter A2. 1998. Variously paged.

9–A3. Cleaning of equipment for water sampling, by F.D. Wilde, D.B., Radke, Jacob Gibs, and R.T. Iwatsubo, editors: USGS—TWRI Book 9, Chapter A3. 1998. Variously paged.

9–A4.Collection of water samples, by F.D. Wilde, D.B. Radtke, Jacob Gibs, and R.T. Iwatsubo, editors: USGS—TWRI Book 9, Chapter A4. 1999. Variously paged.

9–A5.Processing of water samples, by F.D. Wilde, D.B. Radtke, Jacob Gibs, and R.T. Iwatsubo, editors: USGS—TWRI Book 9, Chapter A5. 1999. Variously paged.

9–A6.Field measurements, by F.D. Wilde and D.B. Radtke, editors: USGS—TWRI Book 9, Chapter A6. 1998. Variously paged.

9–A7.Biological indicators, by D.N. Myers and F.D. Wilde, editors: USGS—TWRI Book 9, Chapter A7. 1997. Variously paged.

9–A8.Bottom-material samples, by D.B. Radtke: USGS—TWRI Book 9, Chapter A8. 1998. Variously paged.

9–A9.Safety in field activities, by S.L. Lane and R.G. Fay: USGS—TWRI Book 9, Chapter A9. 1998. Variously paged.

Appendix A5-A. Sample-designation codes and a summary of field-processing requirements for analyses of organic compounds in water

[NWQL, National Water Quality Laboratory of the U.S. Geological Survey; mL, milliliters; °C, degrees Celsius; HCl, hydrochloric acid; mg, milligram; L, liter; LC, laboratory code; %, percent; H_3PO_4, phosphoric acid; $CuSO_4$, copper sulfate; g/L, grams per liter; µm, micrometer; GF/F, baked glass fiber filter media; SH, schedule number; mm, millimeter; SPE, solid-phase extraction; <, less than; oz, ounce; in, inch]

Organic compound[1]	Size and type of sample container[2]	Sample-designation codes of NWQL[1]	Treatment and preservation[3]
Volatile or purgeable organic compounds (VOCs or POCs)	40-mL baked glass septum vial. Replicates are required and numbered in the order filled. Fill 3 vials for ground water, 4 vials for surface water. **No field rinse.**	VOC	Raw sample. Do not let sample degas. Chill/maintain at 4°C. • For treated sample[4]: Add two drops of 1:1 HCl from Teflon™ dropper bottle • If residual chlorine is present, add 25 mL ascorbic acid to vial before filling.
Methylene-chloride-extractable compounds (BNAs)	500-mL baked glass bottle. **No field rinse.**	GCC	Fill bottle to shoulder. Add 1 mL concentrated sulfuric acid to adjust to pH <2. If chlorine is suspected in the sample, add 100 mg ferrous sulfate. Mix, chill, and maintain at 4°C.
Phenols	1-L baked amber glass bottle. **No field rinse.**	LC0052	Raw sample. Add 2 mL of 8.5% H_3PO_4 to 1 L sample to pH 4. Add 10 mL $CuSO_4$ (100 g/L). Fill to shoulder. Chill/maintain at 4°C.
Polychlorinated biphenyls (PCBs)	1-L baked glass bottle. **No field rinse.**	GCC	Raw, untreated sample. Chill/maintain at 4°C.
Pesticides (raw)	1-L baked amber glass bottle. **No field rinse.**	GCC	Raw, untreated sample. Chill/maintain at 4°C.
• Organo-nitrogen herbicides	1-L baked amber glass bottle. **No field rinse**.	GCC	Raw sample, untreated. Chill/maintain at 4°C.
Pesticides (filtered)	1-L baked amber glass bottle. **No field rinse.**	GCC	Filtered sample (0.7-µm GF/F). Chill/maintain at 4°C.
• Organo-nitrogen herbicides	125-mL baked amber glass bottle. **No field rinse**.	GCC (SH1379)	Filtered sample, untreated. Optional: use 25-mm nylon filter capsule. Chill/maintain at 4°C.

Appendix A5-A. Sample-designation codes and a summary of field-processing requirements for analyses of organic compounds in water—*Continued*

Organic compound[1]	Size and type of sample container[2]	Sample-designation codes of NWQL[1]	Treatment and preservation[3]
• Broad spectrum pesticides by C-18 SPE • Broad spectrum pesticides by Carbopak-B™ SPE	C-18 SPE column. Carbopak-B™ SPE column.	SH2010 SH2051	Filtered sample (0.7-µm GF/F), pass through SPE column and treat as described in text. Chill/maintain at 4°C. Filtered sample (0.7-µm GF/F), pass through SPE column and treat as described in text. Chill/maintain at 4°C
Total particulate carbon (TPC)[5]	6-oz and 18-oz Whirl-Pak bags	TPC (LC2606)	Retain particulate material on 25-mm baked glass microfiber filters (GF/F). Fold filters into 6-in x 6-in aluminum foil squares, as described in the text, label, and place into 6-oz bag and then into 18-oz bag. Chill/maintain at 4°C.
Total organic carbon (TOC)	125-mL baked glass bottle. **No field rinse.**	TOC (LC0114)	Raw sample, untreated. Fill to shoulder. Chill/maintain at 4°C.
Dissolved (filtered) organic carbon (DOC)	125-mL baked glass bottle. **No field rinse.**	DOC (LC0113)	Filtered sample (silver filter media) , untreated. Fill to shoulder. Chill/maintain at 4°C.
Suspended organic carbon (SOC)	Petri dish, plastic. No field rinse.	SOC (LC0305)	Retain suspended materials on silver filter, untreated. Chill/maintain at 4°C.
Methylene blue active substances (MBAS)	250-mL polyethylene bottle. **Field rinse.**	RCB	Raw sample, untreated. Fill to shoulder. Chill/maintain at 4°C.
Oil and grease	1-L baked glass bottle. **No field rinse.**	GCC (LC2125)	Raw sample. Leave small headspace. Add about 2 mL H_2SO_4 to lower pH to <2. Chill/maintain at 4°C.

Appendix A5-A. Sample-designation codes and a summary of field-processing requirements for analyses of organic compounds in water—*Continued*

Explosives	1-L baked amber glass bottle. **No field rinse.**	GCC (SH 1377)	Filtered sample (0.7 µm GF/F), untreated. Chill/maintain at 4°C.
Total petroleum hydrocarbons	1-L baked glass bottle. **No field rinse.**	GCC (LC2126)	Raw sample. Leave small headspace. Add about 2 mL H_2SO_4 to lower pH to <2. Chill/maintain at 4°C.
Ultraviolet-absorbing substances			

[1]This table is not complete or comprehensive. Check with NWQL for the most current information on analytical schedules, laboratory codes, parameter codes, sample requirements, prices, and associated information.

[2]Container size is subject to sample-volume and analytical-method requirements. Glass bottles must be received from the laboratory baked, capped, and ready for use. **Do not use glass bottles that arrive uncapped.**

[3]Procedures for sample treatment and preservation are also described in Shelton and others (1994), Koterba and others (1995), Timme (1995), Sandstrom (1995), Zaugg and others (1995), and Werner and others (1996).

[4]Acidification of VOC samples is mandatory for NPDES and NAWQA programs, but normally is optional (unless study objectives dictate acidified samples).

[5]The summary for particulate inorganic carbon (PIC), sample designation code LC2608, is identical for that of TPC.

Appendix A5-B. Sample-designation codes and a summary of field-processing requirements for analyses of inorganic constituents in water

[NWQL, National Water Quality Laboratory of the U.S. Geological Survey; mL, milliliters; °C, degrees Celsius; H_2SO_4, sulfuric acid; HNO_3, nitric acid; <, less than; $K_2Cr_2O_7$, potassium dichromate; NaOH, sodium hydroxide; >, greater than]

Inorganic constituent[1]	Size and type of sample container[2]	Sample-designation codes of NWQL[1]	Treatment and preservation
Nutrients: Nitrogen and phosphorus (raw)	125-mL translucent polyethylene bottle. **Field rinse**.	WCA	Raw sample, treated: Add 1 mL of H_2SO_4. Chill/maintain at 4°C.
Nitrogen and phosphorus (filtered)	125-mL brown polyethylene bottle. **Field rinse.**	FCC FCA	Filtered sample, untreated. Chill/maintain at 4°C. Filtered sample: Add 1 mL of H_2SO_4. Chill/maintain at 4°C.
Anions	250-mL polyethylene bottle. **Field rinse.**	RU FU	Raw sample, untreated. Filtered sample, untreated.
Cations (major cations, trace elements)	250-mL polyethylene bottle, acid rinsed. **Field rinse.**	RA FA	Raw sample. Acidify with HNO_3 to pH<2. Filtered sample. Acidify with HNO_3 to pH<2
Mercury	250-mL glass bottle, (clear), acid rinsed. **Field rinse.**	RAM FAM	Raw sample. Acidify with $HNO_3/K_2Cr_2O_7$. Filtered sample. Acidify with $HNO_3/K_2Cr_2O_7$.
Antimony Arsenic Selenium	250-mL polyethylene bottle, acid rinsed. **Field rinse.**	RAH	Raw sample. Acidify with HNO_3 to pH<2.
Cyanide	250-mL polyethylene bottle. **Field rinse.**	LC0023 LC0880	Raw sample. Add NaOH to pH >12. Chill/maintain at 4°C. Filtered sample. Add NaOH to pH >12. Chill/maintain at 4°C.

[1]List of constituents and sample-designation codes is not complete or comprehensive. Some notable omissions include chemical oxygen demand and sulfide. Check with NWQL for a comprehensive list of analyses and sample designations and instructions. Check National Water Quality Technical Memorandum 97.05 for requirements of the USEPA Drinking Water Program.
[2]Container size is subject to sample-volume and analytical-method requirements. Acid-rinsed bottles must be received from the laboratory capped. Do not use acid-rinsed bottles that arrive uncapped.

Appendix A5-C. Sample-designation codes and a summary of field-processing requirements for analyses of stable isotopes and radiochemicals in water

[NWQL, National Water Quality Laboratory of the U.S. Geological Survey; L, liter; LC, laboratory code; DIC, dissolved inorganic carbon; mL, milliliters; $HgCl_2$, mercuric chloride; °C, degrees Celsius; HNO_3, nitric acid; <, less than; TDS, total dissolved solids]

Stable isotopes and radio-chemicals[1]	Size and type of sample container[2]	Sample-desig-nation codes of NWQL[1]	Treatment and preservation[3]
$^{13}C/^{12}C$	1-L glass bottle, narrow neck, with Teflon™/silicon septum. **Field rinse**.	RUS LC440	Raw sample, untreated. Contact laboratory for $^{13}C/^{12}C$ and $^{18}O/^{16}O$ combined sample (LC1243). Fill bottle to overflowing.
^{14}C	Safety-coated or glass bottles with Teflon™/silicon septum. **Field rinse**. Secure cap with electrical tape. Bottle size depends on sample pH and concentration of DIC per volume of sample.	RUS/RUR	Raw or filtered sample—Filter samples with visible particulates; untreated. Fill bottle to overflowing. Exclude air and (or) flush headspace with nitrogen gas. Store chilled and in the dark. Contact NWQL.
$^{2}H/^{1}H$	60 mL clear glass bottle. Leave small headspace. Option: 250 mL polyethylene, no headspace. Use caps with polyseal conical inserts. Do not use plastic bottles if sample will be held or archived. **No field rinse.**	RUS, LC1574 or SH1142 if analyzing together with $^{18}O/^{16}O$.	Raw or filtered sample, untreated. Fill bottle to overflowing; then decant to leave a slight headspace. (Can be collected with $^{18}O/^{16}O$.)
$^{18}O/^{16}O$	Same as $^{2}H/^{1}H$ (LC1574) No field rinse.	RUS, LC0489 or SH1142 if analyzing together with $^{2}H/^{1}H$.	Filtered or unfiltered sample, untreated. Fill bottle to overflowing.

Appendix A5-C. Sample-designation codes and a summary of field-processing requirements for analyses of stable isotopes and radiochemicals in water —*Continued*

Stable isotopes and radio-chemicals[1]	Size and type of sample container[2]	Sample-designation codes of NWQL[1]	Treatment and preservation[3]
$^{15}N/^{14}N$	1-L amber glass bottle or high-density polyethylene (HDP) bottle. Use caps with polyseal conical inserts. **No field rinse.**	RUS, LC1717 (ammonia), LC1718 (as nitrate), or LC1921 (as nitrate plus ammonia)	Filtered sample, untreated. Fill bottle to shoulder. Wrap HDP bottle in aluminum foil. (Do not add $HgCl_2$.) Chill/maintain at 4 °C. **Send overnight to NWQL.**
$^{34}S/^{32}S$	[Refer to Carmody and others (1998) or E-mail **isotopes@usgs.gov**.]	RUS, Add appropriate laboratory code.	[Refer to Carmody and others (1998) or E-mail isotopes@usgs.gov.]
Radium 226	2-L polyethylene bottle, acid rinsed. (Check with laboratory.) **No field rinse.**	FAR, LC794	Filtered sample. Fill bottle to shoulder. Add HNO_3 to pH <2.
Radium 228	2-L or 7-L polyethylene bottle (check laboratory requirements), acid rinsed. **No field rinse.**	FAR, LC1364	Filtered sample. Fill bottle to shoulder. Add HNO_3 to pH <2.
Uranium U-234 U-235 U-238	Two 1-L polyethylene bottles, acid rinsed. **No field rinse.**	FAR, SH1130	Filtered sample. Fill bottle to shoulder. Add HNO_3 to pH <2.
Gross radio-activity (Gross alpha and gross beta)	1-L polyethylene bottle(s), acid rinsed. **No field rinse.**	FAR, SH456 or SH458, depending on TDS	Filtered sample. Fill bottle to shoulder. Add HNO_3 to pH <2.

Appendix A5-C. Sample-designation codes and a summary of field-processing requirements for analyses of stable isotopes and radiochemicals in water —*Continued*

Stable isotopes and radio-chemicals[1]	Size and type of sample container[2]	Sample-desig-nation codes of NWQL[1]	Treatment and preservation[3]
Tritium[1]	High-density, nonbreakable, poly-ethylene (HDPE) or 1-L glass GCC bottle. **No field rinse.**	RUR	Raw sample, untreated. Leave slight headspace. Do not store sample near radium (for example, glowing clocks, watches, signs)
Radon-222	Glass vial containing liquid-scintil-lation solution. **No field rinse.**	RUR-SV	Raw sample. Inject 10 mL of sample below liquid-scintilla-tion solution.

[1]This table is not complete or comprehensive. Check with NWQL for the most current information on analytical schedules, laboratory codes, parameter codes, sample requirements, prices, and associated information. "G" indicates glass container; "CC" indicates chilled sample; "LC", laboratory code; "SH," laboratory schedule; "R" designates a raw or wholewater sample. For tritium/helium-3 and chlorofluorocarbon sampling requirements, see sections 5.6.3.J and 5.6.3.K, respectively.

[2]If glass bottles are used, leave enough air space in bottles to accommodate expansion of chilled samples unless instructed otherwise. Seal cap with wax or plastic tape, or as directed by laboratory. Send electronic mail requests to isotopes@usgs.gov. Container size is subject to sample-volume and analytical-method requirements. Acid-rinsed bottles must be received from the laboratory capped. Do not use acid-rinsed bottles that arrive uncapped.

[3]Procedures for collection and processing of isotope and radiochemical samples are also described in Shelton and others (1994), Koterba and others (1995), and Timme (l995).

Appendix A5-D. Procedures for Processing Samples for Analysis of Dissolved and Suspended Organic Carbon Using a Silver Filter and Gas-Pressurized Filtration Apparatus.

This appendix describes the original procedure ("Gas-Pressurized Filter Procedures for Processing Samples for Analysis of Dissolved and Suspended Organic Carbon," NFM 5.2.2.C, Version 5/99) for processing samples for analysis of dissolved organic carbon (DOC) and suspended organic carbon (SOC).[1] This procedure may be used as an alternative to those described in section 5.2.2.C. The laboratory analysis of SOC samples requires a different method from that of POC or TPC samples. The field team needs to ensure that the correct method code has been entered onto the laboratory analytical request form.

SOC and DOC can be processed through a 47-mm-diameter, 0.45-µm pore-size, silver-metal filter medium. A gas-pressurized filter assembly (SOC/DOC filter apparatus) constructed of either stainless steel or fluorocarbon polymer is required for this procedure (fig. A5-D.1). In addition, either a peristaltic pump, a manual air pump, or compressed gas (usually organic-free nitrogen gas) is used to pressurize the filtration apparatus and force the sample through the silver filter. Filtration procedures are identical for ground-water and surface-water samples.

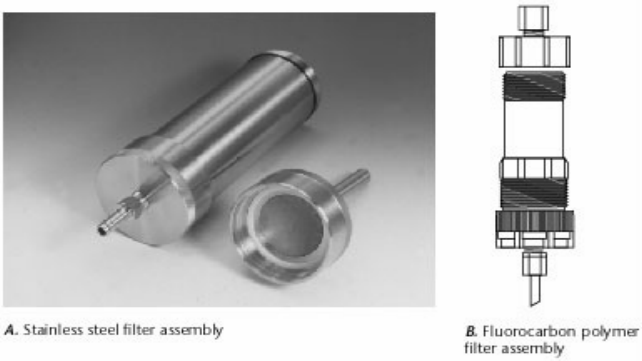

A. Stainless steel filter assembly

B. Fluorocarbon polymer filter assembly

Figure A5-D.1 . Apparatus for filtering samples for analysis of dissolved/suspended organic carbon: (A) stainless steel pressure-filter assembly and (B) fluorocarbon polymer pressure-filter assembly. (Published with permission: A, Gelman Sciences; B, Savillex Corporation.)

[1]Refer to Office of Water Quality Technical Memorandums 2000.05, 2000.07, and 2000.08 for an explanation of changes to the field procedures for collecting and processing samples for organic carbon analysis.

A different set of procedures and separate silver filters are used to process the SOC and the DOC samples, unless suspended-material concentrations are low (up to about 30 mg/L). This section describes methods for (1) filtration of SOC samples only, (2) combined SOC and DOC sample filtration, and (3) filtration of DOC samples only.

- **If sample contains a large amount of suspended materials, at least two filtrations must be performed: one for SOC and one for DOC.**
- If sample contains low concentrations of suspended materials, filtration procedures can be combined using the same silver filter.
- Unless the study plan dictates an additional sample for quality control, only one silver filter should be needed for the SOC filtration.
  - The SOC filtration requires a minimum of 0.5 mg of suspended material in the 125-mL sample.
  - If filter clogging is a problem, or if it is difficult to obtain the 125-mL volume of sample needed for the SOC analysis, 64 mL of sample or multiple 64-mL samples can be substituted.
- Immediately after each use, rinse the filter apparatus several times with organic-grade DIW.
  - Field clean the filter apparatus while still wet if it is to be used at the next site. Otherwise, rinse, bag, and return the apparatus to the office laboratory for cleaning.
  - Thoroughly rinse the white (fluorocarbon polymer) O-ring and any other fluorocarbon polymer parts.
  - After cleaning, double-wrap all apertures and the filter apparatus with aluminum foil and place filter apparatus inside a sealable plastic bag.
- Blank water (VBW or PBW) from a freshly opened bottle should be used for quality-control samples for the DOC analysis. This blank water can also be used for prerinsing the filter media, if necessary. Once the bottle has been opened, the VBW or PBW must not be used for collection of future quality-control samples.
- Document on field forms and in field notes the filtration procedures used.

Do not use methanol or any other solvent to clean SOC, DOC, or TOC equipment (NFM 3).

TECHNICAL NOTE: Use of 64 mL or 125 mL baked glass bottles (available from OWQRL) is recommended instead of a graduated cylinder to measure sample volume for the DOC or combined SOC/DOC analysis. The advantage of using the baked glass bottles to measure volume is that they are certified as clean, whereas graduated cylinders can be difficult to clean adequately, especially under field conditions (Burkhardt and others, 1997), and cannot be baked because calibration will be lost.

- Bottles for DOC samples must have been baked at 400°C and meet a detection limit criterion for organic carbon of <0.1 mg/L.
- Volumetric accuracy of the 125-mL and 64-mL baked glass bottles is about ±1 mL.

SOC sample processing:

SOC analysis of the suspended material left on the silver filter requires that the volume of sample passed through the silver filter be measured and recorded. Determination of the volume of sample to be filtered for SOC analysis can depend on the concentrations of suspended materials; however, the concentration of humic and other substances that cause colored water, such as organic and inorganic colloids, will affect the volume that can pass through the silver filter. The sample volume that can pass through the silver filter decreases as the concentration of suspended materials increases. A graph of the historical stream stage compared to a graph of the suspended-material concentration will aid in estimating suspended-material concentrations at a given surface-water site. Guidelines for selecting the volume of sample to be filtered for SOC analysis, based on suspended-material concentrations, are shown in table 5-6d.

1. Collect the SOC sample(s) in a baked glass bottle, either at the centroid of the streamflow (NFM 4) or as a subsample from the churn or cone splitter. The data-quality requirements of the study and site characteristics determine where to withdraw the sample. If collecting sample at the centroid of flow with a weighted-bottle sampler, fill the bottle to the top; this is not necessary if subsampling from the churn or cone splitter. Cap the bottle securely.

   - Use a 125-mL baked glass bottle for water with relatively small concentrations of suspended materials (concentrations approximately less than 250 to 300 mg/L) (table 5-6d).
   - 64-mL baked glass bottles are recommended for samples that are colored or particulate laden.
   - A clean, graduated cylinder may be used when the volume of sample to be filtered is less than 64 mL.

.

Table 5-6d. Guidelines for selecting the volume needed for filtration of samples for analysis of suspended and particulate organic carbon
[Guidelines are based on sand-sized materials; other physical property factors and chemical composition were not taken into account; mg/L, milligrams per liter; mL, milliliters; >, greater than]

Approximate concentration of suspended materials (mg/L)	Volume of sample to be filtered (mL)
1 - 30	250
> 30 - 300	100
> 300 - 1,000	30
> 1,000	10

2. Cover the bench or table with a sheet of aluminum foil to make a clean work surface. Put on appropriate disposable, powderless gloves. Assemble necessary equipment on the clean work surface.
   a. To remove airborne particulates, attach an in-line, 0.2-µm pore-size filter (Acrodisc 50™) to the inlet side of a dry pump hose that goes to the filter apparatus when using peristaltic or hand pumps to pressurize the apparatus.
   b. Change gloves.
   c. Remove the aluminum foil wrapping from equipment.
3. Disassemble the clean filter apparatus.
4. Using metal forceps, place a silver filter on the base of the filter apparatus between the support screen and the fluorocarbon polymer gasket, and screw the barrel onto the filter base. (There is no gasket in the fluorocarbon polymer apparatus.)
5. Pour a minimum of 100 mL of ASTM Type II reagent water (Burkhardt and others, 1997) or VBW or PBW into the barrel. Analysis of the water used must indicate less than 0.1 mg/L of organic carbon.
6. Screw the top part of the filter apparatus onto the barrel and attach a clean, dry hose, either from a peristaltic pump, hand pump, or compressed gas cylinder (use a clean metal hose clamp to secure the discharge hose to the inlet connector). Set the filter apparatus into a stand.

7. Apply pressure to start the flow of rinse water through the filter apparatus, using either a peristaltic pump or hand pump, or by regulating the flow of compressed gas (usually nitrogen).

   a. The pump pressure must be regulated to less than 15 lb/in^2.

   b. If compressed gas (for example, organic-free nitrogen) is used, ensure that the gas is clean by way of gas-purveyor certification or by attaching an in-line 0.2-mm Gelman Acro™ 50 hydrophobic membrane filter disk. **Do not use any other type of filter**. Proceed as follows:

      i. **Make sure that the pressure regulator valve is closed.** Turn the handle on the pressure regulator counterclockwise for several turns until the pressure-regulator valve is closed.

      ii. Open the valve to the nitrogen cylinder.

      iii. Open the pressure-regulator valve by turning the handle clockwise until up to 15 lb/in^2 registers on the pressure gage. Do not exceed 15 lb/in^2 of pressure.

   c. Discard rinse water.

8. Depressurize the filter apparatus. **Always point the apparatus away from your body, face, and other people.** When using compressed gas,

   a. Close the valve to the pressure regulator after the pressure gage shows no pressure.

   b. Close the valve to the gas cylinder.

   c. Change gloves.

Wear safety glasses when pressurizing or depressurizing the filter apparatus.

9. Remove the top of the filter apparatus carefully.

10. Shake the sample vigorously (swirl if using a graduated cylinder) to suspend all particulate matter. (This is possible even if the bottle is filled to the top.)

11. Pour an aliquot of the sample immediately into the barrel of the filter apparatus, keeping particulates suspended.

12. Screw the top part of the filter apparatus onto the barrel and pressurize to filter the sample. Follow the instructions in step 7 (above) for pressurizing the filter apparatus.

13. After an aliquot of sample has been filtered or filtrate is being collected at less than one drop per minute:

    a. Depressurize apparatus (step 8).

    b. Remove the top of the filter apparatus.

    c. Check if there is water on the silver filter and if it is covered with particulates.

    - If the silver filter is dry but not covered with particulates, add another aliquot of sample by repeating steps 10–12.
    - After the silver filter is dry and covered with particulates, continue to step 14.

TECHNICAL NOTES:

It is important that all the water in the barrel be passed through the silver filter, leaving the filter "dry." To accomplish this, it might be necessary to filter the sample as separate aliquots, repeating steps 10–13 until the filter is loaded to capacity.

Shake the sample to resuspend particulates before pouring each aliquot into the barrel.

If using a 125-mL or 64-mL bottle, it is not necessary to empty the entire sample volume. Use of a clean, graduated cylinder also is acceptable.

It is recommended (but not required) that the sides of the barrel of the filter apparatus be rinsed with organic-grade DIW.

14. Collect the filtrate in a 50-mL or other appropriately sized graduated cylinder.

    - If additional aliquots will be filtered through the same silver filter, collect all the filtrate in the graduated cylinder.
    - When the entire filtration is complete, record the total volume of filtrate on field forms and on the Analytical Services Request (ASR) form.
    - Discard filtrate in the graduated cylinder—**Do not send to laboratory for analysis.**

15. Depressurize (step 8) and disassemble the bottom of the filter apparatus.

    a. Use a pair of metal forceps to remove the silver filter.

    b. Fold the silver filter in half with suspended material on the inside, taking care not to lose any suspended material. **Do not wrap the silver filter in aluminum foil.**

    c. Place the folded silver filter into a petri dish for SOC analysis.

    d. Close the petri dish and label it with site identification, date and time, total filtered volume of sample, and laboratory sample designation code. (The total volume of filtered sample includes the volume used to precondition the silver filter(s).)

    e. Maintain SOC sample at or below 4°C during storage and shipment to the laboratory.

Combined SOC/DOC sample processing:

Procedures for a combined filtering of samples for SOC and DOC analysis are listed below. Additional information can be found in Burkhardt and others (1997).

1. Collect the sample for SOC/DOC analysis as instructed in NFM 4.

2. Cover the bench or table with a sheet of aluminum foil to make a clean work surface. Put on appropriate disposable, powderless gloves. Assemble necessary equipment on the clean work surface.

    a. To remove airborne particulates, attach an in-line, 0.2-µm pore-size filter (Acrodisc 50™) to the inlet side of a dry pump hose that goes to the filter apparatus when using peristaltic or hand pumps to pressurize the apparatus.

    b. Change gloves.

    c. Remove the aluminum foil wrapping from equipment.

3. Disassemble the clean filter apparatus.

4. Using metal forceps, place a silver filter on the base of the filter apparatus between the support screen and the fluorocarbon polymer gasket, and screw the barrel onto the filter base. (There is no gasket in the fluorocarbon polymer pressure-filter apparatus.)

5. Pour a minimum of 100 mL of ASTM Type II reagent water (Burkhardt and others, 1997) or VBW or PBW into the barrel. Analysis of the water used must indicate less than 0.1 mg/L of organic carbon.

6. Screw the top part of the filter apparatus onto the barrel and attach a clean, dry hose, either from a peristaltic pump, hand pump, or compressed gas cylinder (use a clean metal hose clamp to secure the discharge hose to the inlet connector). Set the filter apparatus into a stand.

7. Apply pressure to start the flow of rinse water through the filter apparatus, using either a peristaltic pump or hand pump, or by regulating the flow of compressed gas (usually nitrogen).

Wear safety glasses when pressurizing or depressurizing the filter apparatus.

   a. The pump pressure must be regulated to less than 15 lb/in^2.
   b. If compressed gas (for example, organic-free nitrogen) is used, proceed as follows:
      i. **Make sure that the pressure regulator valve is closed.** Turn the handle on the pressure regulator counterclockwise for several turns until the pressure-regulator valve is closed.
      ii. Open the valve to the nitrogen cylinder.
      iii. To pressurize the filter apparatus, open the pressure-regulator valve by turning the handle clockwise until up to 15 lb/in^2 registers on the pressure gage.
   c. Discard rinse water.

Do not exceed 15 lb/in^2 of pressure.

8. Depressurize the filter apparatus. **Always point the apparatus away from your body, face, and other people.** When using compressed gas,
   a. Close the valve to the pressure regulator after the pressure gage shows no pressure.
   b. Close the valve to the gas cylinder.
   c. Change gloves.
9. Remove the top of the filter apparatus carefully.
10. Condition the silver filter for the SOC/DOC sample:
   a. Select the volume of wholewater (either 64 mL or 125 mL) to be filtered based on the estimated suspended-materials concentration of the sample, and record the volume on the ASR and the field forms. The volume to be filtered can be based on the table 5-6 guidelines and on previous experience of filtering samples from the site.

b. Shake the sample vigorously to resuspend settled particles and measure the sample volume using a clean, baked 64-mL or 125-mL bottle filled to the very top. **Do not field rinse baked glass bottles.** Immediately transfer the entire volume of the sample container to the barrel of the filter apparatus.

c. Screw the top part of the filter apparatus onto the barrel and pressurize to filter the sample. Follow the instructions in step 7 (above) for pressurizing the filter apparatus.

d. Condition the silver filter by passing 15 to 25 mL of sample water through the filter to waste. (Pass 15 mL of sample water through the silver filter if using a 64-mL volume of sample; 15 mL is the minimum volume of sample that should be used.) Record the total volume of water that was passed through the silver filter.

Do not field rinse DOC bottle.

11. Place a 125-mL baked glass bottle under the discharge tube of the filter apparatus and collect the sample filtrate for the DOC analysis (100 mL is recommended; a minimum of 50 mL is required). If the silver filter clogs before sufficient volume for the SOC analysis can be filtered, start the process over and filter a smaller volume of water; the 64-mL bottles are useful for such conditions. **If the silver filter clogs before the entire volume of the 64-mL bottle can be filtered, this combined SOC/DOC method cannot be used. Start over and filter SOC and DOC samples separately.**

    - If the volume needed for the SOC analysis is insufficient for a DOC analysis (less than 50 mL), two or more filtrations through separate silver filters can be combined into one DOC bottle. (Retain two of the filters if a duplicate SOC analysis is planned and record the total volume of sample that passed through each of the retained filters.)
    - Each time a new silver filter is used, repeat steps 3–10, rinsing and conditioning the silver filter as described. Discard the first 15 or 25 mL of sample filtrate to waste. Reposition the DOC bottle under the discharge tube and collect the sample filtrate. Record the total volume of sample that was passed through each silver filter.
    - If the volume needed for SOC analysis is greater than the 100 mL of sample to be used for DOC analysis, remove DOC bottle after filling with 100 mL of filtrate, but continue filtering until the entire volume needed for SOC analysis has been filtered. (Record total volume filtered and discard extra filtrate.)

12. After the DOC sample has been collected and the volume for SOC analysis has been filtered, cap the DOC bottle securely and check that the bottle is labeled correctly and completely. Place the bottle in a foam sleeve before placing in an ice-filled shipping container.

13. Depressurize the filter apparatus (step 8), then disconnect the hose from the filter apparatus cylinder and remove the top. When depressurizing the compressed-gas-operated apparatus:

    a. Close the valve to the pressure regulator only after the gage indicates no pressure.

    b. Close the valve to the nitrogen cylinder.

14. Using no more than a total of 20 mL of organic grade DIW:

    - Rinse residual suspended matter from the bottle that was used to measure sample volume and pour into the filter barrel.
    - Rinse any residual suspended matter from the sides of the filter barrel.

15. Reconnect the top of the filter apparatus. Attach the pressure hose and pressurize (step 7), passing the organic-grade DIW rinse water through the silver filter. Discard rinse water to waste. Depressurize the filter apparatus (step 8).

16. Disassemble the bottom of the filter apparatus and remove the silver filter.

    a. Use a pair of metal forceps when removing the silver filter.

    b. Fold the filter in half with suspended material on the inside, taking care not to lose any suspended material. **Do not wrap the silver filter in aluminum foil.**

    c. Place the folded filter in a petri dish for SOC analysis.

    d. Close the petri dish and label dish with site identification, date and time, total filtered volume of sample, and the laboratory sample designation code. (Include the volume used to precondition the silver filter(s) in the total volume of filtrate.)

    e. Place the labeled petri dish in a sealable plastic bag.

    f. Chill DOC and SOC samples and maintain at or below 4°C without freezing (section 5.5). For SOC samples submitted to NWQL, record the total volume of filtrate on the comment line of the ASR form.

g. If more than one silver filter was needed for the SOC sample, place each silver filter into a separate petri dish that is labeled as described in step 16d. Place all the petri dishes for a single sample into one sealable plastic bag labeled with the site identification and the date and time of sample collection. This is submitted as a single sample.

- Package the silver filter(s) for duplicate SOC analysis separately.
- Ship samples for SOC analysis to the laboratory with a note on the ASR form stating the number of silver filters used.

For SOC analysis, record TOTAL VOLUME of sample that passed through each silver filter.

DOC sample processing:

Procedures for filtering a DOC-only sample are listed below. Additional information can be found in Burkhardt and others (1997).

1. Collect the sample for DOC analysis (NFM 4).
2. Cover a bench or table with a sheet of aluminum foil to make a clean work surface. Put on appropriate disposable, powderless gloves. Assemble necessary equipment on the clean work surface.
   a. To remove airborne particles, attach an in-line filter, 0.2-µm pore size, (Acrodisc 50™) to a dry pump hose in front of the filter apparatus when using peristaltic or hand pumps to pressurize the apparatus.
   b. Change gloves.
   c. Remove the aluminum foil wrapping from equipment.
3. Disassemble the clean filter apparatus.
4. Using metal forceps, place a silver filter on the base of the filter apparatus between the support screen and the fluorocarbon polymer gasket, and screw the barrel onto the filter base. (There is no gasket in the fluorocarbon polymer pressure-filter apparatus.)
5. Pour a minimum of 100 mL of ASTM Type II reagent water (Burkhardt and others, 1997) or VBW or PBW into the barrel. Analysis of the water used must indicate less than 0.1 mg/L of organic carbon.
6. Screw the top part of the filter apparatus onto the barrel and attach a clean, dry hose, either from a peristaltic pump, hand pump, or compressed gas cylinder (use a clean metal hose clamp to secure the discharge hose to the inlet connector). Set the filter apparatus into a stand.

7. Apply pressure to start the flow of rinse water through the filter apparatus, using either a peristaltic pump or hand pump, or by regulating the flow of compressed gas (usually nitrogen).

Wear safety glasses when pressurizing or depressurizing the filter apparatus.

   a. The pump pressure must be regulated to less than 15 lb/in^2.
   b. If compressed gas (for example, organic-free nitrogen) is used, proceed as follows:
      i. **Make sure that the pressure regulator valve is closed.** Turn the handle on the pressure regulator counterclockwise for several turns until the pressure-regulator valve is closed.
      ii. Open the valve to the nitrogen cylinder.
      iii. Open the pressure-regulator valve by turning the handle clockwise until up to 15 lb/in^2 registers on the pressure gage. Do not exceed 15 lb/in^2 of pressure.
   c. Discard rinse water.

8. Depressurize the filter apparatus. **Always point the apparatus away from your body, face, and other people.** When using compressed gas,
   a. Close the valve to the pressure regulator after the pressure gage shows no pressure.
   b. Close the valve to the gas cylinder.
   c. Change gloves.
9. Remove the top of the filter apparatus carefully.
10. Condition the prerinsed silver filter:
   a. Open the barrel of the filter apparatus and pour about 125 mL of wholewater sample into the barrel (or about 64 mL if silver filter media is expected to clog). For water with large concentrations of suspended materials, collect the sample first into a baked glass bottle, allow suspended materials to settle, and pour 125 mL of the clear supernatant into the filter barrel.
   b. Screw the top part of the filter apparatus onto the barrel.
11. Apply pressure to start the flow of sample through the filter apparatus (step 7).
   - **Do not exceed 15 lbs/in^2.**
   - If using compressed gas, open the pressure-regulator valve first, then the valve to release gas from the cylinder (tank).

12. Condition the silver filter media by passing about 25 mL of sample through the silver filter to waste.

13. Filter the sample:

    a. Place a 125-mL organic-free amber glass bottle under the discharge tube of the filter apparatus. **Do not prerinse the DOC bottle.**

    b. If the silver filter media clogs, depressurize the filter apparatus and replace the silver filter.

        i. Rinse the new filter with blank water as described in steps 5–9.

        ii. Fill a clean DOC bottle with the water to be sampled and let the suspended materials settle before decanting the sample into the barrel of the filter apparatus.

        iii. Condition the new silver filter by passing about 25 mL of sample through the filter to waste.

        iv. Reposition the DOC bottle under the discharge tube and continue to collect the filtrate.

    c. Fill the bottle until sufficient volume for DOC analysis has been collected (50 mL is the minimum requirement; 100 mL is recommended). Cap the bottle securely and check that the bottle is labeled correctly. Place the bottle in a foam sleeve before placing in an ice-filled shipping container.

14. Depressurize the filter apparatus (step 8).

15. Chill and maintain the DOC sample at or below 4°C without freezing (section 5.5).

16. Disassemble the bottom of the filter apparatus. Remove the silver filter with metal forceps and place the filter in a plastic bag for disposal or recycling. **Do not reuse silver filters.**

Never increase the pressure in a filter apparatus to greater than 15 lb/in^2 in order to increase the rate of filtration.