Techniques of Water-Resources Investigations

Book 9
Handbooks for Water-Resources Investigations

National Field Manual for the Collection of Water-Quality Data

Chapter A2.

SELECTION OF EQUIPMENT FOR WATER SAMPLING

Revised 2002 by **Susan L. Lane, Sarah Flanagan, and Franceska D. Wilde**

Edited by **Franceska D. Wilde, Dean B. Radtke, Jacob Gibs, and Rick T. Iwatsubo**

USGS
science for a changing world

U.S. DEPARTMENT OF THE INTERIOR
GALE A. NORTON, *Secretary*

U.S. GEOLOGICAL SURVEY
Charles G. Groat, *Director*

Any use of trade, product, or firm names is for descriptive purposes only and does not imply endorsement by the U.S. Government.

For additional information write to:
Chief, Office of Water Quality
U.S. Geological Survey
12201 Sunrise Valley Drive
Mail Stop 412
Reston, VA 20192

Copies of this report can be purchased from:
U.S. Geological Survey
Branch of Information Services
Box 25286, Federal Center
Denver, CO 80225

Foreword

The mission of the Water Resources Discipline of the U.S. Geological Survey (USGS) is to provide the information and understanding needed for wise management of the Nation's water resources. Inherent in this mission is the responsibility to collect data that accurately describe the physical, chemical, and biological attributes of water systems. These data are used for environmental and resource assessments by the USGS, other government and scientific agencies, and the general public. Reliable and objective data are essential to the credibility and impartiality of the water-resources appraisals carried out by the USGS.

The development and use of a *National Field Manual* is necessary to achieve consistency in the scientific methods and procedures used, to document those methods and procedures, and to maintain technical expertise. USGS field personnel use this manual to ensure that data collected are of the quality required to fulfill our mission.

(signed)

Robert M. Hirsch
Associate Director for Water

Book 9
Handbooks for Water-Resources Investigations

Chapters of Section A: *National Field Manual for the Collection of Water-Quality Data*

A1. Preparations for Water Sampling

A2. Selection of Equipment for Water Sampling

A3. Cleaning of Equipment for Water Sampling

A4. Collection of Water Samples

A5. Processing of Water Samples

A6. Field Measurements
- **6.0 General Information and Guidelines**
- **6.1 Temperature**
- **6.2 Dissolved Oxygen**
- **6.3 Specific Electrical Conductance**
- **6.4 pH**
- **6.5 Reduction-Oxidation Potential (Electrode Method)**
- **6.6 Alkalinity and Acid Neutralizing Capacity**
- **6.7 Turbidity**

A7. Biological Indicators
- **7.0 Five-Day Biochemical Oxygen Demand**
- **7.1 Fecal Indicator Bacteria**
- **7.2 Fecal Indicator Viruses**
- **7.3 Protozoan Pathogens (in preparation)**

A8. Bottom-Material Samples

A9. Safety in Field Activities

SELECTION OF EQUIPMENT FOR WATER SAMPLING A2.

National Field Manual for the Collection of Water-Quality Data

Chapter A2.

Page

Abstract 7

Introduction 8

Purpose and scope 9

Requirements and recommendations 10

Field manual review and revision 11

Acknowledgments 11

A2. Selection of Equipment for Water Sampling..... 13

2.0 Chemical compatibility with the water sample..... 15
D.B. Radtke, F.D. Wilde, S.L. Lane, and Sarah Flanagan

2.0.1 Equipment materials 17

2.0.2 Disposable gloves 18

2.0.3 Blank water and chemical reagents..... 19

2.1 Sample collection 21
S.L. Lane, Sarah Flanagan, Jacob Gibs, D.B. Radtke,
W.E. Webb, and F.D. Wilde

2.1.1 Surface-water equipment 22

2.1.1.A Isokinetic depth-integrating samplers 22

Hand-held samplers 27

Cable-and-reel samplers 29

2.1.1.B Nonisokinetic samplers 30

Open-mouth samplers..... 31

Thief samplers 33

Single-stage samplers 35

Automatic samplers and pumps 37

2.1.1.C Support equipment 37

2.1.2 Ground-water equipment..... 38

2.1.2.A Pumps 42

Supply-well pumps 42

Monitoring-well pumps..... 46

Well-development pumps..... 52

2.1.2.B Bailers, thief samplers, and passive diffusion bag samplers 54

Bailers and thief samplers 54

Passive diffusion bag samplers 56

2.1.2.C Support equipment 56

2.2. Sample processing 57
S.L. Lane, Sarah Flanagan, F.D. Wilde, M.W. Sandstrom, K.K. Fitzgerald, and D.B. Radtke

2.2.1 Sample splitters 57

2.2.1.A Churn splitter 59

2.2.1.B Cone splitter 62

2.2.2 Processing and preservation chambers 66

2.2.3 Filtration systems 68

2.2.3.A Inorganic constituents 71

Disposable capsule filter 71

Plate-filter assemblies 73

2.2.3.B Organic compounds 76

Metering pump 77

Filtration assemblies 79

Filter material 83

2.2.4 Pump tubing 84

2.3. Field vehicles 89
S.L. Lane, Sarah Flanagan, and D.B. Radtke

2.4. Lists of equipment and supplies 91
S.L. Lane, Sarah Flanagan, and D.B. Radtke

Conversion factors, selected terms, and abbreviations CF–1

Selected references and technical memorandums REF–1

Appendix: Construction of a collapsible sample-processing/preservation chamber APP–1

Illustrations

2-1. Diagrams of isokinetic depth-integrating samplers: (*A*) US DH-81, (*B*) US DH-95, (*C*) US D-95, (*D*) US D-96, and (*E*) US D-99 25

2-2. Diagrams of nonisokinetic open-mouth samplers: (*A*) hand-held open-mouth bottle sampler, (*B*) US WBH-96 weighted-bottle sampler, (*C*) biochemical oxygen demand (BOD) sampler, and (*D*) volatile organic compound (VOC) sampler ... 32

2-3. Diagrams of nonisokinetic thief samplers: (*A*) Kemmerer sampler, (*B*) Van Dorn sampler, and (*C*) double check-valve bailer with bottom-emptying device 34

2-4. Diagram and photograph of a US U-59 sampler: (*A*) single-stage and (*B*) a bank of U-59 samplers installed on a plank post 36

2-5. Diagrams of pumps typically used to obtain water from supply wells: (*A*) centrifugal pump and (*B*) jet pump 43

2-6. Diagrams of Swagelok® perfluoroalkoxy needle valve: (*A*) front view and (*B*) exploded view 45

2-7. Diagrams of pumps typically used for withdrawal of water samples from monitoring wells: (*A*) peristaltic suction-lift pump and (*B-F*) examples of submersible positive-displacement pumps 50

2-8. Photographs of churn sample splitters: (*A*) plastic churn splitter, and (*B*) fluoropolymer churn splitter 59

2-9. Photograph of a cone splitter 62

2-10. Photographs of (*A*) a polyvinyl chloride frame of a processing or preservation chamber, and (*B*) a sample being processed within the chamber 67

2-11. Photograph of a disposable capsule filter with 0.45-micrometer polyethersulfone pleated filter membrane 72

2-12. Photograph of a nonmetallic backflushing plate-filter assembly for 142-millimeter-diameter filter membrane 75

2-13. Photograph of a valveless piston metering pump 77

2-14. Photographs of flexible fluorinated ethylene polypropylene (FEP) tubing: (*A*) convoluted design and (*B*) corrugated design 78

2-15. Photographs of (A) aluminum plate-filter assembly for 142-millimeter-diameter filter disc and (B) PFA filter holder for 47-millimeter-diameter filter 80

2-16. Diagram of a fluorinated ethylene-propylene pressure-filtration assembly for processing samples for analysis of total particulate and dissolved organic carbon 82

Tables

2-1. General guidelines for selecting equipment on the basis of construction material and target analyte(s) 16

2-2. Isokinetic depth-integrating water-quality samplers and sampler characteristics 24

2-3. Prefield checklist for hand-held and cable-and-reel samplers 27

2-4. General requirements and considerations for selecting ground-water sampling equipment (pumps or thief samplers) 40

2-5. Examples of pump capability as a function of well and pump characteristics in a 2-inch-diameter well 49

2-6. Advantages and limitations of sample splitters 58

2-7. Example of six cone-splitter accuracy tests using deionized water 65

2-8. Capsule filter requirements and recommendations for processing of surface-water and ground-water samples 73

2-9. Common varieties and characteristics of fluorocarbon polymer tubing 85

2-10. Support equipment for surface-water sampling 92

2-11. Support equipment for ground-water sampling 93

2-12. Sample-collection equipment for (*A*) surface water and (*B*) ground water 93

2-13. Sample-processing equipment and supplies 95

2-14. Sample-preservation equipment and supplies 98

2-15. Cleaning and quality-control sampling equipment and supplies 99

2-16. Shipping equipment and supplies 100

2-17. Miscellaneous field supplies 101

Chapter A2. SELECTION OF EQUIPMENT FOR WATER SAMPLING

Revised 2002 by **Susan L. Lane, Sarah Flanagan, and Franceska D. Wilde**

Edited by **Franceska D. Wilde, Dean B. Radtke, Jacob Gibs, and Rick T. Iwatsubo**

ABSTRACT

The *National Field Manual for the Collection of Water-Quality Data (National Field Manual)* describes protocols and provides guidelines for U.S. Geological Survey (USGS) personnel who collect data used to assess the quality of the Nation's surface-water and ground-water resources. This chapter of the manual addresses the selection of equipment commonly used by USGS personnel to collect and process water-quality samples.

Each chapter of the *National Field Manual* is published separately and revised periodically. Newly published and revised chapters will be posted on the World Wide Web on the USGS page "National Field Manual for the Collection of Water-Quality Data." The URL for this page is http://pubs.water.usgs.gov/twri9A/ (accessed March 20, 2003).

INTRODUCTION

As part of its mission, the U.S. Geological Survey (USGS) collects data needed to assess the quality of our Nation's water resources. The *National Field Manual for the Collection of Water-Quality Data (National Field Manual)* describes protocols (requirements and recommendations) and provides guidelines for USGS personnel who collect those data on surface-water and ground-water resources. Chapter A2 provides information about equipment used to collect and process water samples. Requirements, recommendations, and guidelines are described that pertain to the selection and use of field equipment by USGS personnel. **Formal training and field apprenticeship are needed in order to correctly implement the requirements and recommendations described in this chapter.**

The *National Field Manual* is Section A of Book 9 of the USGS publication series "Techniques of Water-Resources Investigations" and consists of individually published chapters. Chapter numbers are preceded by an "A" to indicate that the report is part of the *National Field Manual*. Chapters of the *National Field Manual* are referred to in the text by the abbreviation "NFM" followed by the chapter number (or chapter and section number). For example, NFM 4 refers to chapter 4 on "Collection of Water Samples," and NFM 4.1 refers to the section on surface-water sampling methods.

PURPOSE AND SCOPE

The *National Field Manual* is targeted specifically toward field personnel in order to (1) establish and communicate scientifically sound methods and procedures, (2) provide methods that minimize data bias and, when properly applied, result in data that are reproducible within acceptable limits of variability, (3) encourage consistent use of field methods for the purpose of producing nationally comparable data, and (4) provide citable documentation for USGS water-quality data-collection protocols.

The purpose of chapter 2 of the *National Field Manual* is to provide a description of the requirements, recommendations, and guidelines routinely used for equipment selection in USGS studies involving the collection and processing of water-quality samples. (The terms "required" and "recommended," as used in this report, are explained below under "Requirements and Recommendations.") The information provided covers topics fundamental to the collection and processing of surface-water and ground-water samples that are representative of the ambient environment. This chapter does not attempt to encompass the entire spectrum of data-collection objectives, site characteristics, environmental conditions, and technological advances related to water-quality studies. Descriptions of equipment used to collect and process samples for analysis of biological indicators or suspended solids are given in chapters 7 and 8, respectively, of the *National Field Manual*.

REQUIREMENTS AND RECOMMENDATIONS

As used in the *National Field Manual*, the terms **required** and **recommended** have USGS-specific meanings.

Required (require, required, or requirements) pertains to USGS protocols and indicates that USGS Office of Water Quality policy has been established on the basis of research and (or) consensus of the technical staff and has been reviewed by water-quality specialists and selected District[1] or other professional personnel, as appropriate. Technical memorandums and other documents that define the policy pertinent to such requirements are referenced in this manual. Personnel are instructed to use required equipment or procedures as described herein. Departure from or modifications to the stipulated requirements that might be necessary to accomplish specific data-quality requirements or study objectives must be based on referenced research and good field judgment, and be quality assured and documented in permanent and readily accessible records.

Recommended (recommend, recommended, recommendation) pertains to USGS protocols and indicates that USGS Office of Water Quality policy recognizes that one or several alternatives to a given procedure or equipment selection are acceptable on the basis of research and (or) consensus. References to technical memorandums and selected publications pertinent to such recommendations are cited in this chapter to the extent that such documents are available. Specific data-quality requirements, study objectives, or other constraints affect the choice of recommended equipment or procedures. Selection from among the recommended alternatives should be based on referenced research and good field judgment, and reasons for the selection must be documented. Departure from or modifications to recommended procedures must be quality assured and documented in permanent and readily accessible records.

[1]"District" refers to an organizational unit of the USGS in any of the States or Territories of the United States.

FIELD MANUAL REVIEW AND REVISION

This is Version 2.0 of Chapter A2, "Selection of Equipment for Water Sampling," dated March 2003. Each chapter of the *National Field Manual* is reviewed and revised periodically to correct any errors, incorporate technical advances, and address additional topics. These updated chapters or chapter sections will be reissued in electronic format only. Version 2.0 of this chapter is the first reissue of this report. Subsequent minor changes will be designated as a new version by the number that follows the decimal point. When an NFM chapter incorporates additional topics or major technical changes, the chapter is reissued electronically and reprinted as a new edition. The version or edition number appears in the footer of each page.

To make comments or suggest updates to the NFM, go online to http://pubs.water.usgs.gov/twri9A/ and click on "NFM-GNATS," and then on "Submit a new problem report." Select the "category" by scrolling through the options until you find the chapter and sections that pertain to your report, and fill out the fields indicated. Alternatively, comments or corrections can be sent to nfm-owq@usgs.gov. Newly revised and reissued chapters or chapter sections will be posted on the World Wide Web on the USGS page "National Field Manual for the Collection of Water-Quality Data." The URL for this page is http://pubs.water.usgs.gov/twri9A/ (accessed March 20, 2003). This page also contains a link to the NFM "Comments and Errata" page that chronicles changes to each chapter.

ACKNOWLEDGMENTS

The information included in the original and revised versions of chapter 2 of the *National Field Manual* is based on existing manuals, various reference documents, and a broad spectrum of colleague expertise. D.A. Evans, R.G. Fay, R.T. Iwatsubo, and W.C. O'Neal, whose professional insight, knowledge, and

experience were instrumental in improving the accuracy of the revised version of this chapter, are gratefully acknowledged. The technical content of the original version of this report was enhanced by expertise from B.A. Bernard, Dallas Childers, Jr., T.K. Edwards, G.D. Glysson, J.R. Gray, A.J. Horowitz, H.E. Jobson, K.K. Fitzgerald, J.W. LaBaugh, R.W. Lee, S.W. McKenzie, R.H. Meade, Jr., W.C. O'Neal, R.L. Rickman, S.K. Sando, J.V. Skinner, R.L. Snyder, and Y.E. Stoker. Valuable editorial assistance was provided by I.M. Collies and M.S. Ashman. Production assistance from G.H. Comfort, A.M. Weaver, and M.V. Bonito was instrumental in maintaining the quality of this report.

In addition to the references provided, important source materials included USGS handbooks, manuals, and technical memorandums. The following USGS personnel developed the manuals or protocols that provided the foundation for this *National Field Manual*: M.E. Dorsey, T.K. Edwards, W.B. Garrett, W.J. Gibbons, R.T. Kirkland, L.R. Kister, J.R. Knapton, M.T. Koterba, C.E. Lamb, W.W. Lapham, R.F. Middelburg, Jr., J. Rawson, L.R. Shelton, M.A. Sylvester, and F.C. Wells.

Appreciation is extended to the following companies who granted permission to publish their illustrations in this manual: Bennett Sample Pumps, Inc., Amarillo, Tex.; Cole-Parmer Instrument Company, Vernon Hills, Ill.; Fultz Pumps, Inc., Lewistown, Penn.; Gelman Sciences, Ann Arbor, Mich.; GeoTech Environmental Equipment, Inc., Denver, Colo.; Grundfos Pumps Corporation, Olathe, Kans.; Savillex Corporation, Minnetonka, Minn.; Swagelok Company, Solon, Ohio; Timco Manufacturing Company, Prairie du Sac, Wis.; US Filter/Johnson Screens, St. Paul, Minn.; and Wildlife Supply Company, Saginaw, Mich.

Special thanks go to T.L. Miller and S.K. Sorenson for providing the ongoing support needed to produce and maintain a national field manual for water-quality studies.

Chapter A2. SELECTION OF EQUIPMENT FOR WATER SAMPLING

Revised 2002 by **Susan L. Lane, Sarah Flanagan, and Franceska D. Wilde**

Edited by **Franceska D. Wilde, Dean B. Radtke, Jacob Gibs, and Rick T. Iwatsubo**

This chapter provides information to assist field personnel in selecting the sample-collection and -processing equipment[2] that are appropriate for study objectives, data-quality requirements,[3] and site conditions for water-quality investigations. Selection of equipment for collecting or processing water-quality samples depends on the physical constraints and safe operation of the equipment and on its suitability with respect to achievement of study objectives.

---

[2]Equipment used for field measurements of physical or chemical properties of water (temperature, dissolved oxygen, specific electrical conductance (conductivity), pH, reduction-oxidation potential, alkalinity, and turbidity) is described in NFM 6; equipment used for biological indicator determination is described in NFM 7; equipment used for bottom-material sampling is described in NFM 8; and safety equipment is described in NFM 9.

[3]As used in this publication, the term data-quality requirements refers to that subset of data-quality objectives pertaining specifically to the analytical detection level for concentrations of target analytes and the variability (or error brackets) allowable to fulfill the scientific objectives of the study.

Criteria for selecting equipment for water sampling depend on (1) the mechanical constraints of the equipment to perform adequately under given environmental conditions, (2) the adequacy of equipment operation to obtain water-quality samples that represent the environmental conditions of the sample source, and (3) the adequacy of the equipment materials and construction to maintain sample integrity and not to be a source of leaching and sorption of target analytes.

- **Always operate equipment safely.**
- Be thoroughly familiar with requirements for equipment operation and maintenance.
- Be aware of the limitations as well as applications of the equipment with respect to your field site.
- Maintain and test equipment on a regular schedule.

CHEMICAL COMPATIBILITY WITH THE WATER SAMPLE 2.0

By **D.B. Radtke, F.D. Wilde, S.L. Lane, and Sarah Flanagan**

The materials used to construct and contact equipment can alter sample chemistry (table 2-1). Equipment designed for water-quality work commonly is constructed of a combination of materials, the most inert being used for components that will contact the sample. Nonsample-wetted components and manual contact with sampling equipment also can be a source of sample contamination. Field personnel must wear gloves and use other techniques to minimize potential contamination, implement quality-assurance procedures, and quantify potential effects by analyzing quality-control samples collected using laboratory-certified deionized and blank water.

When planning equipment use, consider having several sets of precleaned equipment available. A clean set of equipment for each sampling site prevents cross contamination between sites, helps to eliminate the need for time-consuming equipment cleaning in the field, and serves as a backup should equipment break or become contaminated.

Check that the equipment to be used will not affect the sample chemistry.

Table 2-1. General guidelines for selecting equipment on the basis of construction material and target analyte(s)

[✓, generally appropriate for use shown; Fl, fluoride; Si, silica; Cr, chromium; Ni, nickel; Fe, iron; Mn, manganese; Mo, molybdenum; $^3H/^3He$, tritium/helium-3; CFC, chlorofluorocarbon; SF-6, sulfur hexafluoride; B, boron]

Construction material for sampling equipment (does not apply to well casing)		Target analyte(s)	
Material	**Description**	**Inorganic**	**Organic**
Plastics[1]			
Fluorocarbon polymers[2] (other varieties available for differing applications)	Chemically inert for most analytes.	✓ (potential source of Fl)	✓ (Sorption of some organics.)
Polypropylene	Relatively inert for inorganic analytes.	✓	Do not use.
Polyethylene (linear)	Relatively inert for inorganic analytes.	✓	Do not use.
Polyvinyl chloride (PVC)	Relatively inert for inorganic analytes.	✓	Do not use.
Silicone	Very porous. Relatively inert for most inorganic analytes.	✓ (potential source of Si)	Do not use.
Nylon	Relatively inert for inorganic analytes.	✓	Do not use. Exception: CFCs
Metals[3]			
Stainless steel, 316-grade (SS 316)	SS 316—metal having the greatest corrosion resistance. Comes in various grades. Used for submersible pump casing.[3]	✓ (potential source of Cr, Ni, Fe, and possibly Mn and Mo, if corroded[4]) Do not use for surface-water sampling: equipment must have a plastic coating (does not apply to submersible pumps).	✓ Do not use if corroded.[4]
Stainless steel, 304-grade (SS 304)	Similar to SS 316, but less corrosion resistant.	Do not use.	✓ Do not use if corroded.[4]
Other metals: brass, iron, copper, aluminum, and galvanized and carbon steels	Refrigeration-grade copper or aluminum tubing are used routinely for collection of $^3H/^3He$, CFC, and SF-6 samples.	**Do not use** (except as noted for isotopes).	✓ Routinely used for CFCs. Do not use if corroded.
Glass			
Glass, borosilicate (laboratory grade) Ceramic	Relatively inert. Potential sorption of analytes.	✓ (glass is potential source of B and Si)	✓

[1]Plastics used in connection with inorganic trace-element sampling must be uncolored or white (Horowitz and others, 1994).
[2]Fluorocarbon polymers include materials such as Teflon®, Kynar®, and Tefzel® that are relatively inert for sampling inorganic or organic analytes.
[3]Most submersible sampling pumps have stainless steel components. One can minimize effects on inorganics samples by using fluorocarbon polymers in construction of sample-wetted components (for example, for a bladder, stator, impeller) to the extent possible.
[4]Corroded/weathered surfaces are active sorption sites for organic compounds and can leach trace elements.

EQUIPMENT MATERIALS 2.0.1

Materials used in equipment can include plastics, glass, ceramics, and metals. Chemical reactivity varies widely within the same group of materials, depending on the chemical composition, the physical configuration, and the manufacturing process. Thus, regarding reactivity with water and most other chemical substances, fluorocarbon polymers are less reactive than plastics such as polyethylene; 316-type stainless steel (SS 316) is less reactive than brass, iron, or galvanized steel (table 2-1). For plastics and metals in general:

- The softer or more flexible forms of any plastic or metal are more reactive than the rigid forms.
- The more polished the surface, the less reactive the material tends to be.

2.0.2 DISPOSABLE GLOVES

Use of disposable, powderless gloves is required when handling equipment for collecting and processing water-quality samples. Wearing gloves serves to protect field personnel from contact with contaminants and chemical preservatives, and protects the sample from contamination transmitted by sample handling.

Although common glove types include those made of vinyl, latex, and nitrile, nitrile is in standard use for USGS sampling work because of its resistance to most of the chemicals to which it typically will be exposed, for the length of exposure (usually under 15 minutes). Field personnel are cautioned that direct contact with materials such as latex or nitrile can cause severe allergic reactions in some individuals and should be monitored.

- Wear powderless nitrile gloves when handling equipment and chemical solutions. **Do not allow the water that enters the sample bottle to contact gloved (or bare) hands.**
- Check the manufacturer's chemical resistance chart for any compound, such as acid, base, or organic solvent, to which the glove might be exposed.

Physical properties to consider when selecting disposable gloves are glove length, slip protection, puncture resistance, heat and flame resistance, cold protection, and comfort. These factors can vary between manufacturers.

Gloves should be inspected visually for defects. Check for tears, punctures, and other flaws that can prevent the glove from being an effective shield. After putting the gloves on, rinse them with water while gently rubbing hands together to remove any surface residue before handling sampling equipment.

BLANK WATER AND CHEMICAL REAGENTS 2.0.3

USGS personnel must use the blank water designated by the USGS National Water Quality Laboratory (NWQL) and available through the Ocala Water Quality and Research Laboratory (OWQRL). Blank water for quality-control samples must have a laboratory-certified analysis to document the chemical composition and chemical concentration. Several grades of blank water are available, and selecting the appropriate grade depends on the sample analysis to be performed.

- **VPBW** (Volatile/Pesticide-Grade Blank Water): Blank water that is suitable for collecting blank samples to be analyzed for volatile organic compounds, pesticides, and all inorganic constituents (major ions, trace elements, and nutrients); purged with nitrogen gas.
  - Shelf life of unopened bottle of VPBW for analysis of volatile organic compounds (VOCs) is 2 weeks after VPBW has been purged of VOCs, and 1 year for other constituents.
  - VPBW also is referred to as N_2-purged Universal Blank Water—see Office of Water Quality Technical Memorandum 2002.14.
- **PBW** (Pesticide-Grade Blank Water): Blank water that is suitable for collecting blank samples to be analyzed for pesticides, major ions, and trace elements.
  - Shelf life of unopened bottle is 1 year after date of laboratory (NWQL) certification.
  - PBW also is referred to as Universal Blank Water when used instead of IBW.
- **IBW** (Inorganic-Grade Blank Water): Blank water that is suitable for collecting blank samples to be analyzed for inorganic trace elements, major ions, and nutrients.

Deionized water (DIW), including ASTM International (formerly known as American Society for Testing and Materials) Type 1 water from other sources, is not an acceptable substitute for the blank water described above. DIW that has been quality-controlled may be used as a cleaning solution, as described in NFM 3.

Unopened bottles of blank water must be stored in a location where there is no exposure to vehicle exhaust, cleaning fluids, or other solvents. No open bottles of blank water are to be stored for later use to collect blank samples to be analyzed for either inorganic or organic analytes.

SAMPLE COLLECTION 2.1

By **S.L. Lane, Sara Flanagan, Jacob Gibs, D.B. Radtke, W.E. Webb, and F.D. Wilde**

Guidelines for selecting sample-collection equipment and related supplies differ, depending on the chemical nature of the target analyte and on whether samples are collected for surface water or ground water. Routine use should be made of checklists, field forms (see NFM 6.0.1 and 6.0.2), and logbooks. Examples of checklists for sample-collection equipment and supplies are provided in section 2.4.

A logbook must be maintained that is dedicated to keeping calibration and maintenance records for each field-measurement, field-analysis, and multiparameter instrument. A field book in which the equipment and methods used for project activities and field-site observations are recorded also is strongly recommended. Logbooks and other records documenting field activities may be requisitioned if the project data are a likely candidate for litigation. Documentation of equipment use and extra quality-control analyses are necessary if study objectives or site conditions result in a departure from published USGS required or recommended procedures.

- Logbooks must be bound so that pages are not readily removable (no loose leaf or spiral notebooks), and pages should be preprinted with consecutive numbers.
- Entries in logbooks or on field forms must be in ball-point pen or permanent non-smudge marker (not pencil or liquid ink) and dated.
- Do not erase incorrect entries or mistakes: draw a single line through the mistake and initial and date it.

All equipment should be maintained and tested on a regular schedule (NFM 6). For example, thermistor thermometers should be checked every 3 to 4 months, along with an annual 5-point calibration (NFM 6.1.2). Equipment checks, calibrations, maintenance, and repair must be entered into the logbook.

2.1.1 SURFACE-WATER EQUIPMENT

Study objectives, flow conditions, and structures (such as a bridge, cableway, or boat) from which sample-collection equipment (a sampler) is deployed must be considered when determining which equipment to use. The equipment selected also depends on whether the stream can be waded or not. To determine whether stream depth and velocity are too great to safely wade the stream (NFM 9), follow this rule of thumb:

RULE OF THUMB: Do NOT wade in flowing water when the product of depth (in feet) multiplied by velocity (in feet per second) equals 10 or greater.

Application of this rule varies among individuals according to their weight and stature, and depends on the condition of the streambed.

Two primary types of surface-water samplers are used by the USGS:

- Isokinetic depth-integrating samplers
- Nonisokinetic samplers

2.1.1.A ISOKINETIC DEPTH-INTEGRATING SAMPLERS

An isokinetic depth-integrating sampler is designed to accumulate a representative water sample continuously and isokinetically (that is, stream water approaching and entering the sampler intake does not change in velocity) from a vertical section of a stream while transiting the vertical at a uniform rate (ASTM, 1999; see NFM 4, Appendix A-4-A). Isokinetic depth-integrating samplers are categorized into two groups, based on the method of suspension: hand-held samplers and cable-and-reel samplers.

Types and pertinent characteristics of isokinetic depth-integrating samplers recommended for sampling in flowing water are summarized in table 2-2, illustrated on figure 2-1, and described below. For detailed descriptions of isokinetic depth-integrating samplers, refer to Szalona (1982), Ward and Harr (1990), Horowitz and others (1994), Edwards and Glysson (1999), and Federal Interagency Sedimentation Project at http://fisp.wes.army.mil (accessed March 20, 2003).

For collection of an isokinetic sample, minimum stream velocity must be greater than 1.5 feet per second (ft/s) for a rigid-bottle depth-integrating sampler, or 2.0 ft/s for a US D-96 or US D-99 bag sampler.

The maximum allowable transit rate (R_t) relative to mean velocity (V_m) for a given sampler varies with nozzle size and sample-bottle size (equipment properties were designed using English units; refer to page CF-1 for conversion to metric units) (table 2-2). **Do not exceed the listed R_t/V_m ratio for the given nozzle and bottle size.** A lower R_t/V_m is better for ensuring that a representative velocity-weighted sample is collected, but care must be taken to not overfill the sampler bottle. **Do not exceed the 15 ft (approximately 4.6 meters (m)) maximum depth of deployment for a rigid-bottle sampler.**

Table 2-2. Isokinetic depth-integrating water-quality samplers and sampler characteristics

[R_t, transit rate in feet per second (ft/s); V_m, mean stream velocity in the vertical being sampled, in ft/s; DH, depth-integrating hand-held sampler; PN, polypropylene cap and plastic (Delrin®) nozzle; PFA, perfluoroalkoxy bottle or bag; C&N, cap and nozzle; PC, plastic coated; PT, polypropylene or PFA bottle; PDC, plastic dip coated; D, depth-integrating sampler; P, plastic nozzle; TFE, tetrafluoroethylene nozzle]

Sampler designation	Sampler construction material	Sampler dimensions			Distance of nozzle from bottom, in inches	Suspension method	Maximum calibrated velocity, in feet per second	Maximum depth, in feet	Sampler container size, in liters	Nozzle intake size,[1] in inches	Maximum transit rate ratio,[2] R_t/V_m
		Length (inch)	Width (inch)	Weight (pound)							
US DH-81	PN or PFA-C&N	[3]6.5	3.2	[3]0.5	[4]4	Hand-held (PC)	7.6	15 15 13.3	1 (PT)	3/16 1/4 [1]5/16	0.2 .3 .4
US DH-95	Bronze (PDC) with PN or PFA-C&N	22	6.6	29	4.8	Hand-held or reel and cable	7.4	15 15 13.3	1 (PT)	3/16 1/4 5/16	.18 .32 .4
US D-95	Bronze (PDC) with PN or PFA-C&N	26	6.7	64	4.8	Reel and cable	6.7	15 15 13.3	1 (PT)	3/16 1/4 [1]5/16	.18 .32 .4
US D-96	Bronze (PDC) with P or TFE nozzle	35	8	132	4	Reel and cable	12.5	110 60 39	3 (PFA)	3/16 1/4 5/16	.4 .4 .4
US D-99	Bronze (PDC) with P or TFE nozzles	47	10	275	9.5	Reel and cable	15	220 120 78	6 (PFA)	3/16 1/4 5/16	.4 .4 .4

[1]Nozzle sizes are those recommended for the application shown.
[2]Refer to NFM 4, Appendix A, for maximum transit-rate ranges, and to Office of Surface Water Technical Memorandum 94.05, dated January 31, 1994.
[3]Length, width, and weight will depend on specific bottle dimensions. Weight indicated is for cap and nozzle only. Handle is plastic coated with clear heat-shrinking tubing.
[4]Distance of nozzle from the bottom will depend on specific bottle dimensions.

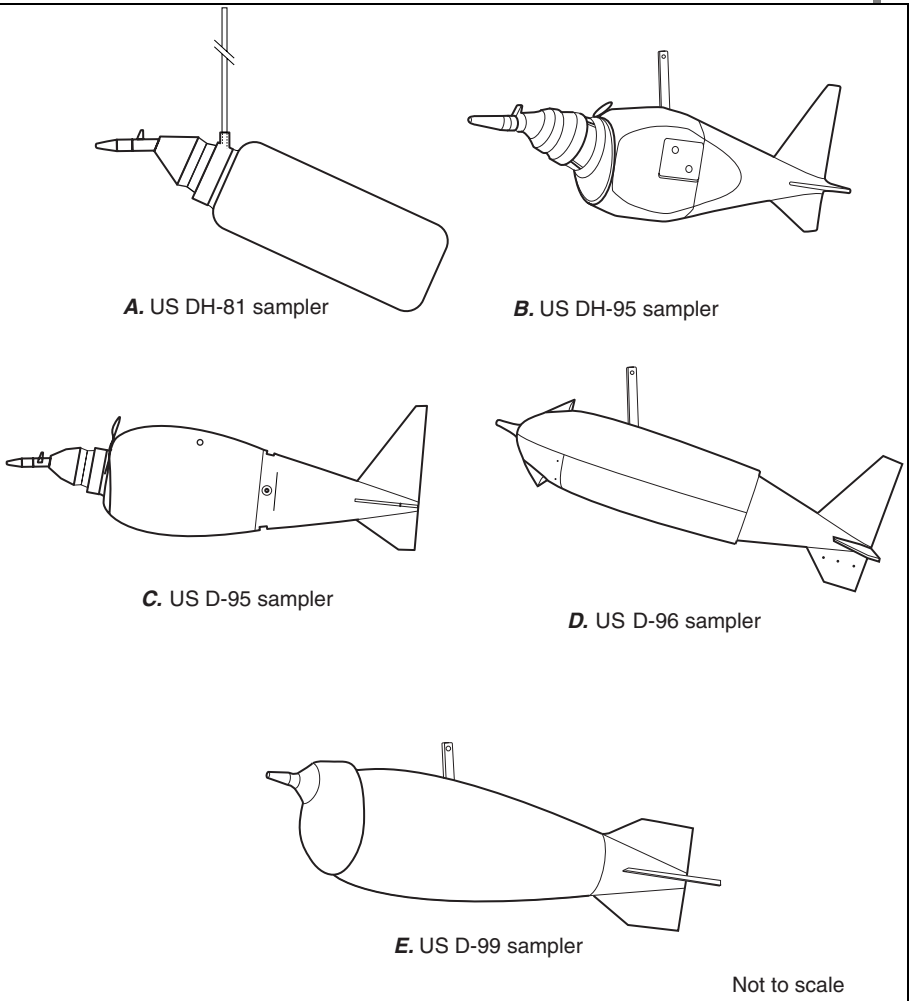

Figure 2-1. Isokinetic depth-integrating samplers: (*A*) US DH-81, (*B*) US DH-95, (*C*) US D-95, (*D*) US D-96, and (E) US D-99. (Illustrations courtesy of Federal Interagency Sedimentation Project, Waterways Experiment Station, Vicksburg, Miss.)

The cap-and-nozzle assembly is available in fluoropolymer and polypropylene materials. The same cap and nozzle can be used for the US DH-81, US DH-95, and US D-95 samplers.

- Use the US DH-81, US DH-95, US D-95, US D-96, or US D-99 samplers (fig. 2-1) to collect samples in flowing waters for all analyses except inorganic gases and volatile organic compounds.
  - Samples of water for determination of trace elements must contact only noncontaminating materials, typically fluorocarbon polymer or polypropylene.
  - Samples of water for determination of organic compounds must contact only noncontaminating materials, typically a metal (such as stainless steel), fluoropolymers or fluorocarbon polymers (such as Teflon®[4]), or ceramics (such as hard-fused microcrystalline alumina).
- Discontinue use of the US DH-48, US DH-59, US DH-76, US D-49, US D-74, US D-77, US D-77 Bag, Frame Bag (FB), US P-61, US P-63, and US P-72 samplers for collecting trace-element samples (refer to Office of Water Quality Technical Memorandum 2002.09 for details): testing indicates that these samplers contaminate samples with measurable concentrations of trace elements.
  - Some of these samplers may be acceptable for major ions, nutrients, and suspended sediments.
  - Collect additional quality-control samples if it is necessary to use any of these samplers (Horowitz and others, 1994).

[4]Teflon is a registered trademark of the DuPont Corporation.

Hand-held samplers

The US DH-81 (fig. 2-1*A*) or US DH-95 (fig. 2-1*B*) sampler is used to collect water samples where flowing water can be waded or where a bridge is accessible and low enough from which to sample. The sampler components (cap, nozzle, and bottle) are interchangeable. Both inorganic and organic samples can be collected with either sampler as long as the construction material of the sampler components (table 2-1) does not affect ambient concentrations of target analytes. Isokinetic depth-integrated samples for bacteria analysis also can be collected with these samplers because the cap, nozzle, and bottle can be autoclaved. All hand-held samplers should be tested and maintained as described on table 2-3. The checklist also applies to cable-and-reel samplers.

Table 2-3. Prefield checklist for hand-held and cable-and-reel samplers

✓	Sampler items	Comment
	Mechanical operation	Test the working condition of the sampler. If tail fin is damaged or broken, sampler will not swim correctly.
	Nozzles	Replace nozzles that have burrs or are damaged. Use only nozzles purchased from the Federal Interagency Sedimentation Project.
	Plastic coating	If plastic coating is damaged or any metal parts are exposed, recoat or touch up with a plastic dip product.
	Sampler is clean	Before field work, clean appropriate parts of the sampler according to procedures described in NFM 3 and store in plastic for transport to the field site.
	Laboratory results from analysis of sampler blank	Make sure the sampler has been quality assured with an annual equipment blank and certified for water-quality use (see NFM 1 and NFM 4).
	Separate sets of sampler components and backup equipment	If at all feasible, for a given field trip when collecting multiple water samples, prepare and use separate sets of sampler bottles, caps, and nozzles for each sampling site. Have backup equipment available on-site.
	Field-cleaning supplies and blank water	If separate sets of sampler components are not available, then clean equipment between sampling sites (see NFM 3) and be prepared to process the number of field blanks needed to document that equipment was adequately cleaned.

When using the US DH-81 (fig. 2-1*A*):

- Use a 3/16-, 1/4-, or 5/16-in. nozzle.
- Make sure that flow velocity exceeds 1.5 ft/s (~0.46 m/s) but does not exceed 7.6 ft/s (~2.32 m/s) (to collect an isokinetic sample).
- Maximum depth of deployment must be within 15 ft (~4.6 m) if using a 3/16- or 1/4-in. nozzle, and within 13.3 ft (~4 m) if using a 5/16-in. nozzle.
- Use caution when sampling in depths that exceed 13.3 ft (~4 m) to avoid overfilling the sampler.

When using the US DH-95 (fig. 2-1*B*):

- Use the 1-L bottle. Use caution when sampling in depths that exceed 13.3 ft (~4 m) to avoid overfilling the sampler.
- To collect an isokinetic sample when using a 3/16-in. nozzle, flow velocity must be between 2.1 to 6.2 ft/s (~0.64 to 1.9 m/s) and depth of deployment should not exceed 15 ft (~4.6 m).
- To collect an isokinetic sample when using a 1/4-in. nozzle, flow velocity must exceed 1.7 ft/s (~0.52 m/s) but be no greater than 7.4 ft/s (~2.25 m/s), and depth of deployment should be within 15 ft (~4.6 m).
- To collect an isokinetic sample when using a 5/16-in. nozzle, flow velocity also should be between 1.7 and 7.4 ft/s (~0.52 and 2.25 m/s), and depth of deployment should not exceed 13.3 ft (~4 m).

Cable-and-reel samplers

Cable-and-reel samplers are used to collect water samples where flowing water should not be waded. These include the US D-95, US D-96, and US D-99 samplers. (Refer to table 2-2 for sampler characteristics and sampling limitations.) Like the hand-held US DH-81 and US DH-95, these cable-and-reel samplers can be used for collecting inorganic and organic samples; however, appropriate sampler components (cap, nozzle, and bottle or bag) must be selected so as not to bias concentrations of target analytes. Isokinetic depth-integrated samples for bacteria analysis also can be collected with these samplers because the cap, nozzle, bottle, and bags can be autoclaved.

The US D-96 Bag sampler uses a perfluoroalkoxy (PFA) or polyethylene bag that is placed in a sliding tray that supports the bag and holds the nozzle holder with nozzle in place. The bag is attached to the nozzle holder with a hook-and-loop strap. The US D-99 Bag sampler uses a 6-L PFA or polyethylene bag that is placed in a chamber behind the nozzle, through an access door.

Metal parts of the US D-95 Bottle sampler and US D-96 Bag and US D-99 Bag samplers must be coated with plastic (for example, Plasti Dip®) and recoated periodically to prevent possible sample contamination from metallic surfaces. **All cable-and-reel samplers should be tested and maintained before use, as described on table 2-3.**

When using the US D-95 Bottle sampler (fig. 2-1*C*):

- Use a 3/16-, 1/4-, or 5/16-in. nozzle. US DH-81 and DH-95 nozzles can be used.
- Make sure that flow velocity exceeds 1.7 ft/s (~0.52 m/s), but no greater than 7.4 ft/s (~2.25 m/s), depending on the nozzle diameter used.
- Use in water less than 13.3 to 15 ft (~4 to 4.6 m) deep (at sea level), depending on the nozzle used and altitude at the site for an isokinetic, depth-integrated sample.

When using the US D-96 Bag sampler (fig. 2-1*D*):

- Use a 3/16-, 1/4- or 5/16-in. nozzle. The nozzles needed are unique to the D-96 sampler and mounts.
- Make sure that flow velocity exceeds 2 ft/s (~0.61 m/s), but is no greater than 12.5 ft/s (~3.8 m/s).
- Use in water with a maximum depth between 39 and 110 ft (~11.9 and 33.5 m), depending on nozzle diameter for an isokinetic, depth-integrated sample.
- Water temperature must be at or greater than 4°C. The sampler has been tested at temperatures of 39°F (4°C) and found to function properly.

When using the US D-99 Bag sampler (fig. 2-1*E*) **for isokinetic sampling:**

- Use a 3/16-, 1/4- or 5/16-in. nozzle and mount (do not use a 1/8-in. nozzle that is designed for the D-99 sampler).
- Make sure that flow velocity exceeds 3.0 ft/s (~0.9 m/s).
- Use in water with a maximum depth between 78 and 220 ft (~23.8 and 67 m), depending on nozzle diameter, for an isokinetic, depth-integrated sample.
- Water temperature must be at or greater than 4°C.

2.1.1.B NONISOKINETIC SAMPLERS

Nonisokinetic samplers are sampling devices in which the sample enters the device at a velocity that differs from ambient stream velocity. All of the isokinetic samplers described in 2.1.1.A can be used to collect depth-integrated, although nonisokinetic, samples, when used beyond the minimum and maximum ranges of velocity and depth (table 2-2). As with all samplers, the materials that contact the sample must not bias concentrations of target analytes by sorbing or leaching target analytes.

Open-mouth samplers

Open-mouth samplers used for the collection of water samples include the hand-held bottle, the weighted-bottle sampler, the biochemical oxygen demand (BOD) sampler, and the volatile organic compound (VOC) sampler (fig. 2-2).

- **The hand-held bottle sampler** is the simplest type of open-mouth sampler. A bottle is dipped to collect a sample (fig. 2-2*A*) where depth and velocity are less than the minimum requirements for depth-integrating samplers.
- **The weighted-bottle sampler** is available in stainless steel (US WBH-96) (fig. 2-2*B*) or polyvinyl chloride. The weighted-bottle sampler can be used to collect samples where flow velocities are less than the minimum requirement for isokinetic depth-integrating samplers and where the water body is too deep to wade. An open bottle is inserted into a weighted holder that is attached to a handline for lowering. Sampling depth is restricted by the capacity of the bottle and the rate of filling.
- **The BOD sampler and the VOC sampler** (fig. 2-2*C-D*), respectively, are open-mouth samplers designed to collect nonaerated samples.
  - The BOD sampler accommodates 300-milliliter (mL) glass BOD bottles specifically designed to collect samples for dissolved-oxygen determination (American Public Health Association and others, 1992, p. 4-99).
  - The VOC sampler is specifically designed to collect nonaerated samples in 40-mL glass septum vials for determination of volatile organic compounds.

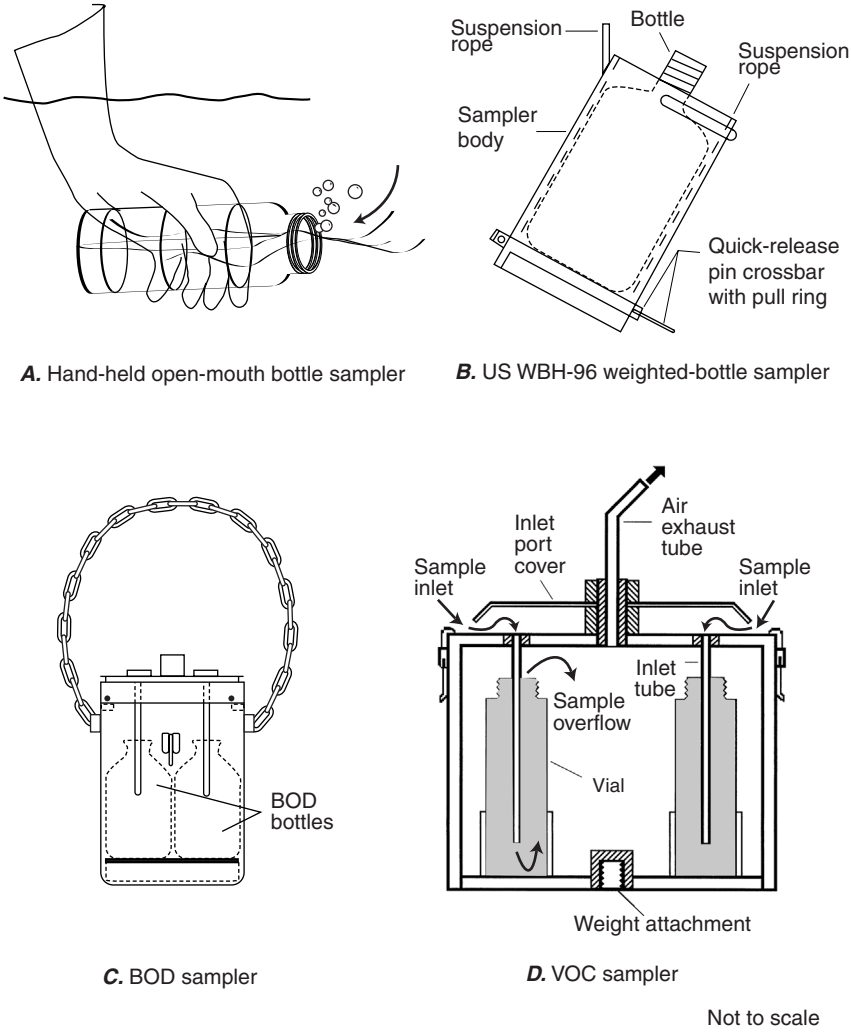

Figure 2-2. Nonisokinetic open-mouth samplers: (*A*) hand-held open-mouth bottle sampler, (*B*) US WBH-96 weighted-bottle sampler, (*C*) biochemical oxygen demand (BOD) sampler, and (*D*) volatile organic compound (VOC) sampler. (*A*, from U.S. Environmental Protection Agency, 1982b; *B*, courtesy of Federal Interagency Sedimentation Project, Waterways Experiment Station, Vicksburg, Miss.; *C*, published with permission of Wildlife Supply Company; *D*, from Shelton, 1997.)

Thief samplers

Thief samplers are used to collect instantaneous discrete samples. Thief samplers have been used primarily to collect samples from lakes, reservoirs, and some areas of estuaries. Smaller versions, designed to collect ground-water samples, also have been used in still and flowing surface water. The most commonly used thief samplers are the Kemmerer sampler, Van Dorn sampler, and double check-valve bailer with bottom-emptying device (fig. 2-3). These samplers are available in various sizes, mechanical configurations, and in various types of construction material (such as stainless steel, glass, polyvinyl chloride, fluorocarbon polymer). Disposable fluorocarbon polymer bailers also are available. For descriptions of additional thief samplers, see U.S. Environmental Protection Agency (1982b), Ward and Harr (1990), and American Public Health Association and others (1992) or consult the manufacturer of environmental sampling equipment.

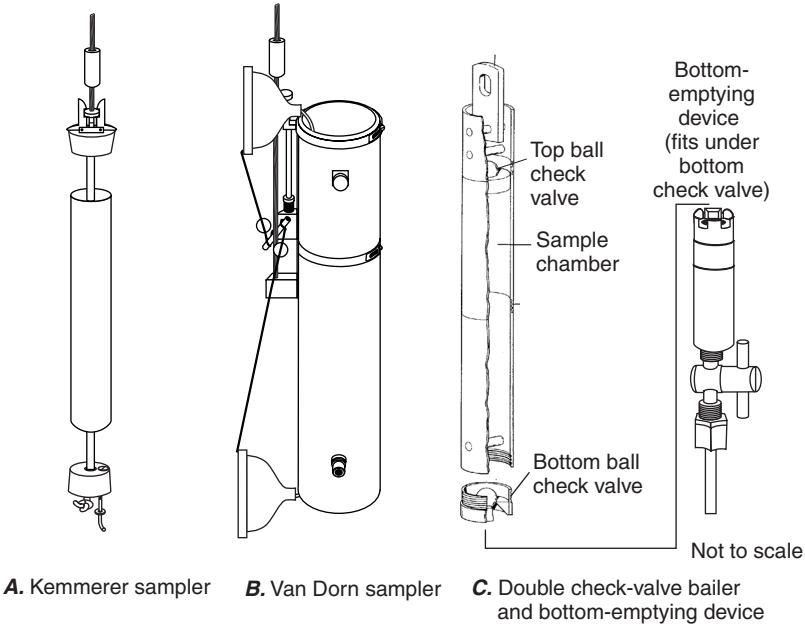

Figure 2-3. Nonisokinetic thief samplers: (*A*) Kemmerer sampler, (*B*) Van Dorn sampler, and (*C*) double check-valve bailer with bottom-emptying device. (*A-B*, from *Standard Methods for Examination of Water and Wastewater*, 18th Edition. Copyright 1992 by the American Public Health Association, the American Water Works Association and the Water Environment Federation. Used with permission. *C*, published with permission of Timco Mfg. Inc.)

Single-stage samplers

Single-stage samplers such as the US U-59 (fig. 2-4*A*) are designed to obtain suspended-sediment samples from streams at remote sites or at streams where rapid changes in stage make it impractical to use a conventional isokinetic depth-integrating sampler. Single-stage samplers can be mounted above each other to collect samples from different elevations or times as streamflow increases and the hydrograph rises (fig. 2-4*B*). (Edwards and Glysson, 1999.)

- **The US U-59** is a sample container mounted to collect a water sample as stage rises above the sampler intake.
  - The vertical-intake sampler is used to sample streams carrying sediments finer than 0.062 millimeter (mm). The vertical intake is less likely to become clogged or fouled by floating solid materials compared to a horizontal-type intake.
  - The horizontal-intake sampler is used to sample streams carrying sediment coarser than 0.062 mm.
- **The US U-73,** which can be used to sample water during either rising or falling stage, is constructed to provide some protection form trash or other solids that could clog or foul the intake.

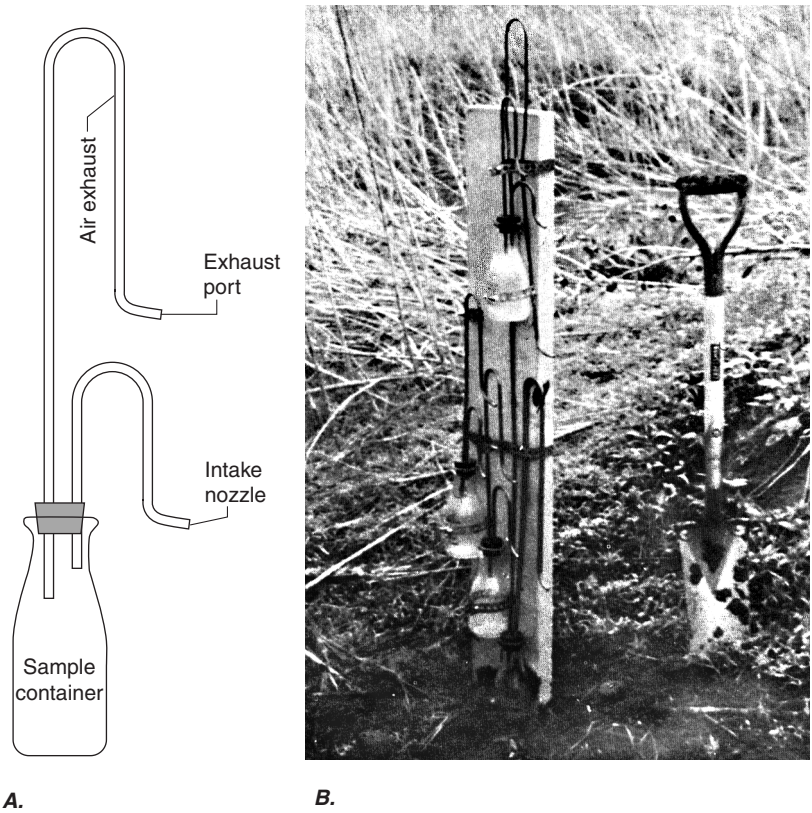

Figure 2-4. US U-59 sampler: (*A*) single stage, and (*B*) a bank of U-59 samplers installed on a plank post. (A, from Edwards and Glysson, 1999; B, photograph by J.C. Mundorff.)

Automatic samplers and pumps

Automatic pumping samplers (autosamplers) with fixed-depth intake(s)[5] are sometimes used to collect samples at remote sites; from ephemeral, small streams; or from urban storm drains where stage rises quickly (American Public Health Association and others, 1992; Edwards and Glysson, 1999). These samplers can be programmed to collect samples at preset time intervals or at selected stages, thus reducing the personnel requirements for time-intensive sampling. Whenever automatic samplers or pumps are used, the sample is considered to be a point-integrated sample.

Pumps used for water sampling are grouped into two general categories: suction-lift pumps and submersible pumps. Pumps can be used to collect water samples from lakes, reservoirs, and estuaries (Radtke and others, 1984; Radtke, 1985; Ward and Harr, 1990). Suction-lift and submersible pumps are described in section 2.1.2, "Ground-Water Equipment."

SUPPORT EQUIPMENT 2.1.1.C

Much of the equipment used to measure streamflow also can be used as support equipment when collecting water samples in water bodies that cannot be waded. Examples of commonly used support equipment are listed in section 2.4.

Clean Hands/Dirty Hands techniques described in NFM 4 are required when sampling for trace elements (Horowitz and others, 1994) and are recommended as a general practice in sample collection, particularly when using heavy-duty support equipment.

[5]Automatic pumping samplers are available through commercial manufacturers, such as American Sigma, ISCO, and Manning.

Use of a vertical transit rate pacer, such as the US VTP-99, can help to ensure an accurate flow-weighted sample, after the appropriate transit rate has been determined (Edwards and Glysson, 1999, p. 53–60). Once programmed, the pacer produces an audible signal for pacing the raising and lowering of either hand-held or mechanically hoisted samplers. The pacer is small enough to be carried in a shirt pocket, and the tone is audible for several feet in a quiet environment. The US VTP-99 can be used with a miniature phone-type monaural headphone jack; neither the jack nor the headphones are supplied. Tables for using the pacer when sampling with either a hand-held sampler or type "A," "B," or "E" reel can be found in the publication "Using the US VTP-99 vertical transit rate pacer."[6]

Exercise great care to avoid sample contamination when using support equipment to handle samplers for collecting trace-element samples.

2.1.2 GROUND-WATER EQUIPMENT

The type of sampler or sampling system selected depends on the type and location of well, depth to water from land surface, physical characteristics of the well, ground-water chemistry, and the analytes targeted for study. Selecting the appropriate equipment for collecting ground-water samples is important in order to obtain data that will meet study objectives and data-quality requirements. Ground-water sampling equipment is available from commercial sources. Support equipment (for example, tubing, valves, manifolds) is available commercially or, for USGS personnel, through the Hydrologic Instrumentation Facility (HIF).

[6]The publication is available at the URL http://fisp.wes.army.mil/Instructions%20US%20VTP-99%20990722.pdf (accessed March 20, 2003).

Ground water most commonly is collected using either pumps designed specifically for water sampling from monitoring wells, pumps installed in supply wells, or a bailer or other point or thief-type sampler.[7] General considerations for selecting ground-water equipment are listed in table 2-4.

- Monitoring wells: Samplers can be portable, dedicated, or permanently installed in the well.
  - Portable equipment is commonly used at multiple well sites and cleaned after each use.
  - Portable samplers and sample tubing commonly are dedicated to be used only at a site with large contaminant concentrations.
  - Some types of portable equipment can be installed in a well for the duration of the monitoring program. Remove the sampler periodically for cleaning.
- Supply wells (for domestic, public (municipal), industrial or commercial, and agricultural use): Equipment selection is limited as such wells normally are equipped with permanent, large-capacity pumps.
  - Choice of equipment usually depends on well configuration and type of pump installation (permanent or temporary).
  - Modifications to the well and ancillary equipment attached at the wellhead are necessary in some cases (see section 2.1.2.A.)

[7]Additional categories of sampling equipment not described in this report include multilevel collection systems (LeBlanc and others, 1991; Smith and others, 1991; Gibs and others, 1993); samplers designed to collect ground water under natural-gradient flow conditions (Margaritz and others, 1989); and pump-and-packer systems.

Table 2-4. General requirements and considerations for selecting ground-water sampling equipment (pumps or thief samplers)

Requirements	Considerations
Construction materials	• Is the sampler constructed from materials that (initially or over time) could leach targeted analytes? If left in the well, is the sampler constructed of materials that will degrade appreciably within the lifetime of the study? • Can the sampler be cleaned? Can it withstand the level of decontamination needed and subsequently produce clean equipment blanks?
Operation, capabilities, and limitations	• Could operation of the sampler compromise sample integrity with respect to study objectives or data quality? For example, does the sampler heat or aerate the sample, or subject it to negative pressure, leading to volatilization of purgeable organic compounds, oxidation of target analytes, or changes in partial pressure of carbon dioxide or other gases? • Is the sampler capable of evacuating standing water (that is, can it be used for purging in addition to sample collection)? • Is the sampler capable of providing flow or sample volumes sufficient for sample collection and in a manner that minimizes suspension of sediments or colloids that could bias chemical measurements? • Is the sampler mechanically capable of withdrawing formation water from the desired depth?
Power requirements	• What are the power requirements of the sampler or the manner in which it will be deployed? Will it require electrical power (alternating or direct current), gasoline or other fuel-powered generators, or compressed gas such as air or nitrogen? • Will the capacity of the power source be sufficient to allow the sampler to run continuously throughout purging and sample collection? • Could the power source contaminate samples? (For example, gasoline-powered generators or compressors are a potential source of volatile organic compounds.) • Could the fuel be changed to a noncontaminating type (for example, convert a gasoline-powered generator to propane fuel)?
Transport	• Is the sampler easily transported to remote sites and rugged enough for field use?
Sampler repair	• Can the sampler be repaired in the field?
Availability and cost	• Are the available samplers suitable for study use? Are funds available to purchase, operate, and maintain the sampler? • Are funds available to purchase a spare pump head? This would allow for continuous use of a sampling pump while one pump head is being repaired.

Sampling equipment must not be a source of contamination or otherwise affect analyte concentration (table 2-1). Of specific importance for ground-water sampling is a potential change in ground-water chemistry due to atmospheric exposure.

- Select equipment that minimizes sample aeration.
- Select equipment that will not leach or sorb significant concentrations of the target analytes, with respect to data-quality requirements.
  - Samplers that tested successfully[8] for inorganic constituents[9] were the Grundfos Redi-Flo2®, Fultz SP-300, Bennett, and several bladder pumps (with Teflon® bladders), submersible pumps, and double check-valve fluorocarbon polymer bailers.
  - Samplers tested that achieved a greater than 95-percent recovery of volatile organic compounds were Grundfos Redi-Flo2®, Fultz SP-300, bladder pumps, and the Bennett pump. Recovery for double check-valve fluorocarbon polymer bailers was less than 95 percent (U.S. Geological Survey, 1992a, b).

Choice of equipment is constrained by many factors, including equipment construction and specifications. For example, it is necessary to consider the power requirements, lift capability, and discharge capacity of submersible pumps. Ideal equipment for sample collection might not exist, and compromise is often necessary. **Field personnel must understand the application, advantages, disadvantages, and limitations of the available equipment with respect to study objectives and site characteristics, and must document how any compromises made might affect the data and data-quality objectives.**

---

[8]Unpublished results of testing by the USGS confirmed that commonly used sampling equipment does not, in general, affect sample concentrations of inorganic constituents or organic compounds (U.S. Geological Survey Office of Water Quality, written commun., 1994). (The samplers tested were precleaned and fitted with new, cleaned tubing and had fluorocarbon polymer interior parts, where available.)

[9]Trace-element concentrations in blank samples processed through these samplers were within the margin of analytical variability at a method reporting level of 1 microgram per liter.

2.1.2.A PUMPS

Pumps transport water from depth to land surface either by suction lift or positive pressure.[10] The pumping mechanism for most suction-lift pumps (peristaltic, jet, and some nonsubmersible centrifugal pumps) is at land surface. Positive-pressure pumps (helical rotor, gear, bladder, piston, inertial submersible, and centrifugal) are grouped together as submersible pumps because they are placed below static water level.

Supply-well pumps

Jet (venturi) pumps and above land-surface centrifugal pumps (fig. 2-5), as well as high-capacity submersible pumps and turbine pumps are common in domestic, municipal, and other supply wells.

- Be aware that large- and small-capacity pumps used in supply wells can affect analyte concentrations. (See NFM 1 and Lapham and others, 1997.)
  - Erroneous data produced as a result of using these pumps are most likely for dissolved gases, VOCs, and reduction-oxidation (redox) chemical species.
  - Oil in the water column is common for oil-lubricated pumps.
  - Chemical treatment systems, pressure tanks, and holding tanks can compromise sample integrity.

[10]For more detailed information on pumps, refer to manufacturers' instructions and specifications and to U.S. Environmental Protection Agency (1982b), Morrison (1983), Driscoll (1986), Imbrigiotta and others (1988), Ward and Harr (1990), American Public Health Association and others (1992), Gibs and others (1993), Sandstrom (1995), Koterba and others (1995), and Edwards and Glysson (1999).

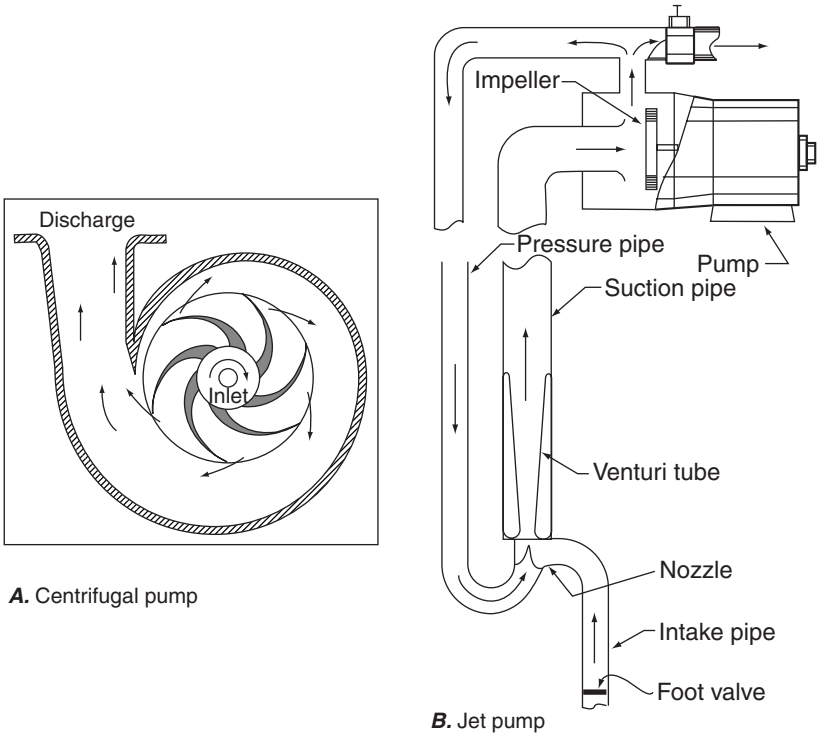

Figure 2-5. Pumps typically used to obtain water from supply wells: (*A*) centrifugal pump, and (*B*) jet pump. (From Driscoll, 1986, and published with permission of US Filter/Johnson Screens.)

- Install a hookup system for transfer of sample from the wellhead to the chamber or area where samples will be processed (NFM 4 and 5). Clean such equipment of oils and other manufacturing and shipping residues (NFM 3) before use.

  — Ensure that the point of sample discharge from the hookup system on supply wells is ahead of chemical treatments or holding tanks. Obtain permission to modify the discharge point by installing a spigot or other plumbing appropriate to preserve the quality of the sample, if possible. Otherwise, do not use the well. The spigot or other plumbing also must be cleaned before use.

  — Install an anti-backsiphon device in line with the hookup system.

  — Install an optional needle valve with flow-regulating capabilities in line with the hookup system (fig. 2-6*A*).

A. Swagelok® PFA Needle Valve number PFA-4RPS8 (fits 1/2-inch tubing)

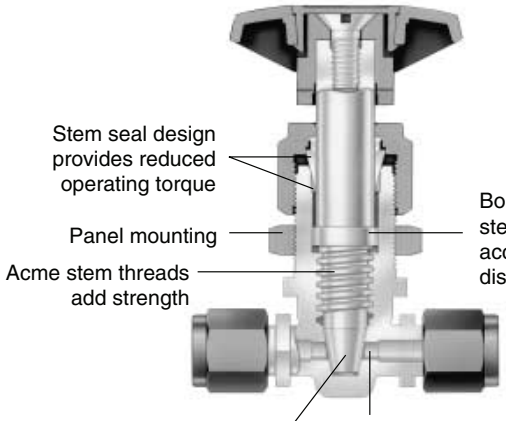

B. Materials of Construction

Component	Material Grade/ASTM Specification
1 Handle insert	PFA 440-HP/ D3307
2 Screw	
3 Handle	
4 Packing nut	
5 Upper packing	
6 *Lower packing*	
7 *Stem stop*	
8 Panel nut	
9 *Stem*	
10 *Body, ferrules*	
11 Nut	
Lubricant	PTFE based

Wetted components listed in *italics*.

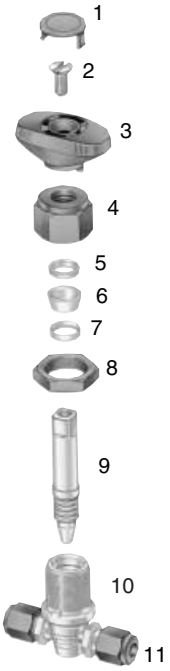

Figure 2-6. Swagelok® perfluoroalkoxy needle valve: (*A*) front view and (*B*) exploded view.

Monitoring-well pumps

Suction-lift and positive-displacement pumps are commonly used to collect water samples from monitor (monitoring) wells. Field personnel should consider the criteria and guidelines listed in tables 2-4 and 2-5 when selecting a pump for sampling from monitoring wells.

- Suction-lift pumps create a vacuum in the intake line that draws the sample up to land surface (fig. 2-7*A*).
  - The vacuum can result in the loss of dissolved gases and VOCs.
  - Intake tubing could diffuse atmospheric gases sufficiently to affect some target analytes unless thick-walled low-diffusion tubing is used.
  - Use of a peristaltic pump (1- to 2-L/min pumping rate) is limited to wells in which depth to water is less than about 25 ft (approximately 9 m). The operational lift may be as small as 20 ft.
  - Peristaltic pumps have the advantages of few moving parts, easily replaceable tubing and heads, and portability.
  - Provided that data quality is not compromised, properly operated peristaltic pumps can be used to obtain samples from shallow wells, especially those that produce small volumes of water.
- Submersible pumps (positive pressure or other types of positive-displacement pumps) designed specifically for collection of water samples from monitoring wells generally are preferred because they do not create a vacuum (fig. 2-7*B*–*F*).

- In general, do not use submersible pumps for well development. This can ruin the pump, shorten its functional life, or damage smooth internal surfaces, causing leaching of target analytes.
  - Install an anti-backsiphon device in-line to prevent backflow from contaminating the ground water.
  - Select suitable materials for sample line, sample-line connectors (see “Pump Tubing,” section 2.2.4), and sample-line reels (see “Support Equipment,” section 2.1.2.C, and "Lists of Equipment and Supplies," section 2.4) for use with portable submersible pumps.
- The suitability and application of commonly used submersible pumps depends on pump and well characteristics and on practical constraints (tables 2-4 and 2-5). It is necessary to determine that:
  - the rate of pumping is suitable for a given lift (table 2-5),
  - the maximum lift of the pump at the water surface is greater than the lift to land surface,
  - the power source and pump characteristics are sufficient to allow the pump to run continuously throughout purging and sample collection,
  - the height of the water column must be at least 5 ft above the top of the submersible pump (to avoid setting the pump intake too close to the bottom of the well), and
  - the pumping rate will not cause excessive drawdown, resulting in intersection of the water level with the well screen or open interval or causing the well to go dry.

- The pump used to purge and sample the well generally is not appropriate for well development or redevelopment (Lapham and others, 1997). Using a pump designed for sample collection as a well-development tool can shorten the pump life or damage smooth internal surfaces, causing leaching of target analytes. If the well should be redeveloped in preparation for collecting a representative sample, two options that are available include use of an inertial lift pump or use of an air-suction lift pump.

Portability and repairability are important logistical considerations when selecting a pump. All the pumps shown in figure 2-7 are made for transport to and from the field, but fuel or electrical power requirements make some more awkward to transport and operate at remote sites than others (not shown is the inertial-lift pump, which has no fuel or electrical power requirement when operated manually). Ruptured bladders for bladder pumps can be replaced easily in the field. Fluorocarbon polymer impellers used in gear pumps are easily abraded and can be ruined by particulate-laden water. Such impellers can be replaced in the field, but usually with some difficulty. Submersible centrifugal pumps and piston pumps generally are not easily repaired in the field and can be awkward to transport, but include features such as variable-speed capability that make them favored for many applications. When selecting a pump for sampling, consider purchasing an additional pump head (the submerged motor component) since most repairs involve the pump head. The pump heads for some pump types or models (such as the Fultz pump) are constructed for quick connect and disconnect, to ease pump head replacement under field conditions.

Table 2-5. Examples of pump capability as a function of well and pump characteristics in a 2-inch-diameter well

[Table modified from Koterba and others (1995), p. 18-19. ft, foot; gal, gallon; TDH, total dynamic head; gal/min, gallon per minute; ~, approximately; ---, not available]

Well characteristics			Pump characteristics			
			Example: Fultz SP-300 (lift capacity is exceeded at ~150 ft)		Example: Grundfos RediFlo2® (lift capacity is exceeded at ~260 ft)	
Water-column height (ft)	Lift or TDH[1] (ft)	Three-well-volume purge protocol[2] (gal)	Pumping rate at lift or TDH shown (gal/min)	Maximum volume after 2 hours pumping[3] (gal)	Pumping rate at lift or TDH shown (gal/min)	Maximum volume after 2 hours pumping (gal)
20	25	10	1.0	120	7.0	840
40	160	20	---	---	~4.8	538

[1]In these examples, the lift is equivalent to TDH and is estimated as the depth to water in the well (see Koterba and others, 1995, for explanation).
[2]Standard procedure is to purge a minimum of three well volumes while monitoring field measurements (NFM 4, NFM 6): purge volume = V=0.0408HD^2, where H is water-column height (in feet) and D is the well diameter (in inches).
[3]Maximum pumped volume is calculated from the pumping rate for a given pump system (from manufacturer's specifications) at the lift (or TDH) multiplied by an assumed total purging time of 2 hours (see Koterba and others, 1995).

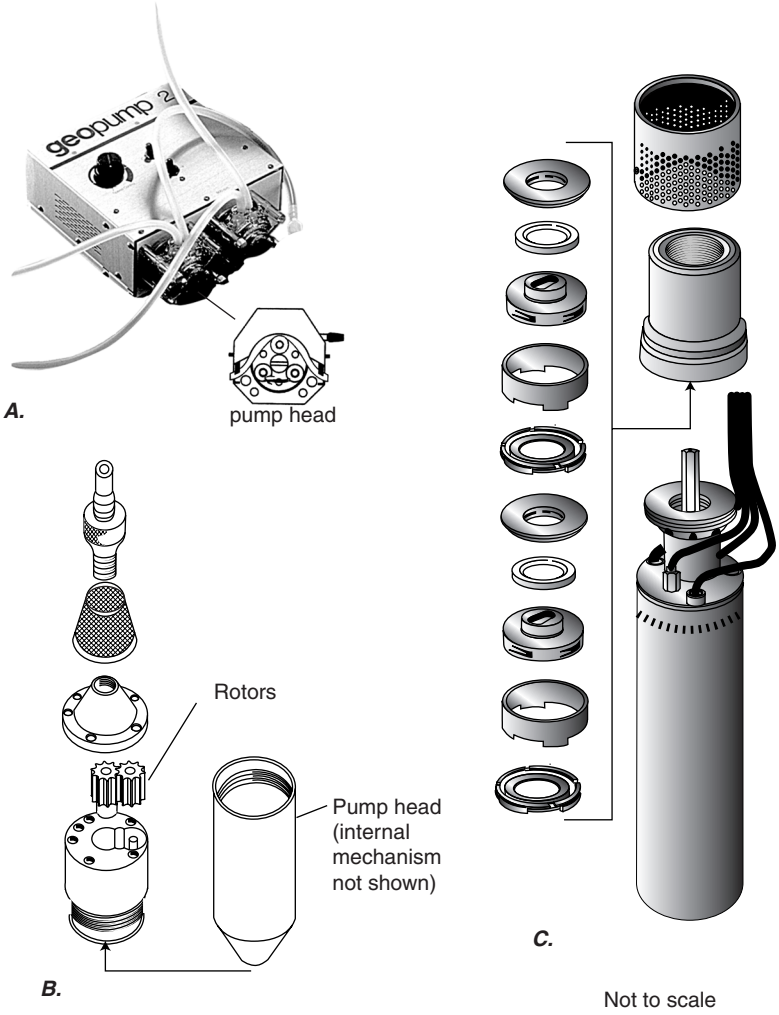

Figure 2-7. Pumps typically used for withdrawal of water samples from monitoring wells: (*A*) peristaltic suction-lift pump and (*B-F*) examples of submersible positive-displacement pumps. (*A*) peristaltic pump showing detail of pump head, (*B*) electrical gear or rotor pump, (*C*) electrical centrifugal impeller pump showing detail of impeller assembly. (Illustrations published with permission: *A*, GeoTech Environmental Equipment, Inc., with pump head from Cole-Parmer Instrument Company; *B*, Fultz Pumps, Inc.; *C*, Grundfos Pumps Corporation.)

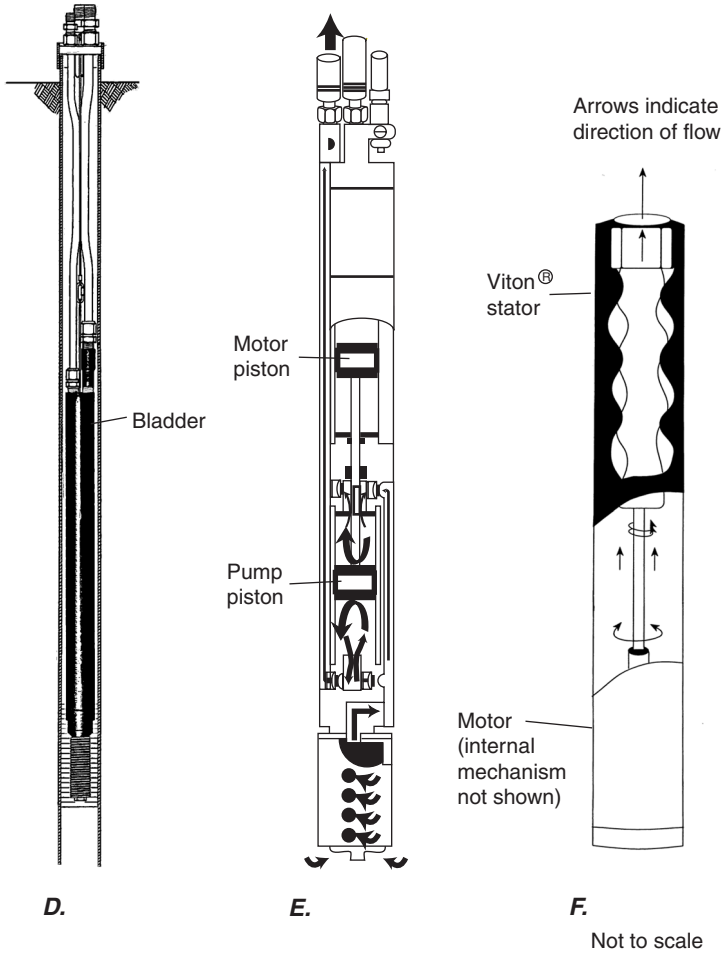

Figure 2-7. Pumps typically used for withdrawal of water samples from monitoring wells: (*A*) peristaltic suction-lift pump, and (*B-F*) examples of submersible positive-displacement pumps—*Continued*. (*D*) bladder pump, (*E*) reciprocating piston pump, and (*F*) progressive cavity pump. (Illustrations published with permission: *D* and *F*, GeoTech Environmental Equipment, Inc.; *E*, Bennett Sample Pumps, Inc.)

Well-development pumps

Wells need to be developed after construction to remove sediment and other debris at the bottom of the well and to improve hydraulic connection to the aquifer. Wells might need to be redeveloped after long periods of inactivity before water-quality samples are collected. Sounding of the well (confirming the well depth) may indicate that the well should be redeveloped in preparation for collecting a representative sample. The pump used to purge and sample the well, in general, is not appropriate for well development or redevelopment (Lapham and others, 1997).

- Use of inertial pumps fitted with a surge block (for example, the Waterra Inertial Pump, Model 404), is an effective and easily operated method for well development or redevelopment. The Waterra Pump consists of a riser tube (5/8-in. or 1.58-cm outer diameter (OD) polyethylene or similar tubing) with a one-way valve at the bottom of the tubing and a surface hand- or mechanical-pumping mechanism. The valve allows water to enter the tubing as it is pushed downwards, and retains the column of water when the riser tube is pulled upward again. Adding a surge block to the riser tube and valve creates a strong churning effect that helps to remove sediment that collected at the bottom of the well. Such a pump works well in silty/sandy environments, and can be successfully operated in wells with depths ranging up to 100 ft (~30.6 m) when using a hand pump, 200 ft (~61 m) when using a pump powered by an electric motor, and 250 ft (~76 m) when using a pump powered by a gasoline motor.

- Another inexpensive option to consider in well development is to use inexpensive disposable plastic (clear or white) tubing with a suction-lift pump. This method, however, is limited to shallow wells with water table depths less than 25 ft (~7.6 m) from the land surface. To aid in removing sediments from the bottom of the well, add a surge block and one-way valve to the bottom of the tubing as described above. The tubing can be physically raised and lowered, producing a purging effect. To prevent cross-contamination of wells, new tubing, surge block, and valve should be used for each well that is developed or redeveloped.

- Wells can also be developed by the air-lift or gas-lift method. This method is not recommended for shallow wells, but may be the only method available for very deep wells, especially for wells that approach 2,000 ft (~610 m) in depth. In this method, compressed air is forced down the well and replaces the water and debris in the casing. The displaced water and debris in the well casing is then forced up and out of the well. **However, care must be taken to ensure that air is not forced from the well screen into the surrounding aquifer system. Air introduced into the aquifer can change its geochemistry, either temporarily or permanently.**

2.1.2.B BAILERS, THIEF SAMPLERS, AND PASSIVE DIFFUSION BAG SAMPLERS

Use of a bailer or other thief sampler disturbs the water column, especially when it is raised and lowered repeatedly, and is not recommended for this reason. The disturbance can result in stirring up or mobilizing particulate matter, including colloidals or mineral precipitates that are artifacts of well construction and are not part of the ambient ground-water flow. This, in turn, can result in analysis of substantially greater than ambient concentrations of trace elements and hydrophobic organic compound(s). This is not a concern with passive diffusion bags.

Bailers and thief samplers

Bailers can have some necessary and useful applications, even though they are not generally recommended for ground-water sampling. Bailers are the only option available for sampling some ground-water systems, especially at great depth. Use of a bailer is preferred at sites where concentrations of contaminants are extremely large, because bailers are easier to clean (some are disposable and therefore do not require cleaning) and less expensive to replace than pumps. The following recommendations apply in situations where bailers are the only reasonable choice for sampling wells.

- Select bailers with double check valves (fig. 2-3*C*), to ensure that a point sample has been collected and to help prevent sample aeration. The material of choice normally is fluorocarbon polymer (Teflon®) because it can be used when sampling for both organic and inorganic analytes, and can be readily cleaned.
- Consider using disposable fluorocarbon polymer bailers at sites where concentrations of contaminants are large. Discard disposable equipment after one use.
- Use a bottom-emptying device through which the rate of sample flow can be controlled. Place the bailer into a holding stand while emptying sample from the bailer through the bottom-emptying tube.
- Use either fluorocarbon polymer-coated or colorless (white) polypropylene line for lowering the sample; keep the line on a reel. Polypropylene is easy to clean and inexpensive, and can be discarded after one use.

Specialized sealed downhole samplers, grouped loosely under the thief-sampler category (fig. 2-3), are designed to capture and preserve in situ ground-water conditions by precluding sample aeration and pressure changes from sample degassing (escape of VOCs) or outgassing (escape of inorganic gases). Such sampling equipment includes syringe samplers (Gillham, 1982), true thief samplers (Ficken, 1988), samplers using hermetic isolation methods (Gibs and others, 1993; Torstensson and Petsonk, 1988), chlorofluorocarbon (CFC) samplers (Busenberg and Plummer, 1992), and a combined well-bore flow and depth-dependent water sampler (Izbicki and others, 1999).

Passive diffusion bag samplers

Water-filled passive diffusion bag (PDB) samplers are suitable for obtaining samples to be analyzed for selected volatile organic compounds (VOCs).[11] A typical PDB sampler consists of a low-density polyethylene (LDPE) lay-flat tube closed at both ends and containing deionized water. The sampler is positioned at the target horizon of the well by attachment to a weighted line or fixed pipe. Sampler construction and application are described in Vroblesky (2001).

2.1.2.C SUPPORT EQUIPMENT

The support equipment used during ground-water sampling depends on the type and size of the pump or sampler used, field conditions, and depth to water or to sampling interval in the well. A reel should be used for efficient and clean deployment of the sample line. Commonly used support equipment is listed in section 2.4. A detailed description of the various types of support equipment is beyond the scope of this manual.

[11]PDBs are not suitable when collecting samples to be analyzed for inorganic ions, methyl-*tert*-butyl, acetone, or phthalates, and have limited applicability for other non-VOCs.

SAMPLE PROCESSING 2.2

By **S.L. Lane, Sara Flanagan, M.W. Sandstrom, K.K. Fitzgerald, F.D. Wilde, and D.B. Radtke**

Water samples must be processed as quickly as possible after collection. The equipment most commonly used for sample processing includes sample splitters, disposable capsule filters, filtration assemblies, solid-phase extraction systems, and chambers in which samples are processed and treated with chemical preservatives. Having several sets of cleaned processing equipment on hand is recommended. The equipment and supplies commonly used to process surface-water and ground-water samples are listed in section 2.4.

SAMPLE SPLITTERS 2.2.1

The collection of surface water generally results in a single composite sample. A ground-water sample generally is not collected as a composite; instead, the sample is pumped directly into separate bottles for designated analyses. There are exceptions. For example, ground water withdrawn using a bailer or thief sampler can be collected as a composite sample, provided that sample integrity for the analytes of interest can be maintained.

A composite sample often is subdivided (split) into subsamples for analysis. Each whole-water subsample should contain suspended and dissolved concentrations of target analytes that are virtually equal to those in every other subsample. Use of polypropylene/polyethylene (plastic) churn splitters, the fluorocarbon polymer churn splitter, and the cone splitter are discussed in sections 2.2.1.A and 2.2.1.B, respectively. Testing and comparative data between the splitters are described in Capel and Larson (1996), Horowitz and others (2001), and in Office of Water Quality Technical Memorandum 97.06. Advantages and limitations among the fluoropolymer churn splitter, plastic churn splitter, and cone splitter are shown in table 2-6.

Table 2-6. Advantages and limitations of sample splitters

[L, liter; mg/L, µm, micrometer; milligrams per liter; mL, milliliters; >, greater than; ≤, less than or equal to]

Splitter	Advantages	Limitations
Fluoropolymer churn splitter	Can be used to process samples for both inorganic and non-volatile organic analyses. Simple to operate. Easy to clean. No modification of the splitter design is necessary.	Although it can be used to split samples with particle sizes ≤ 250 µm and suspended-sediment concentrations ≤ 1,000 mg/L, splitting accuracy becomes unacceptable for particle sizes >250 µm and suspended-sediment concentrations >1,000 mg/L. Sample volumes less than 4 L or greater than 13 L cannot be split for whole-water subsamples from this 14-L churn. Samples for bacteria determinations are not to be taken from a churn splitter because the splitter cannot be autoclaved.
Plastic (non-fluorocarbon polymer) churn splitter	Simple to operate. Easy to clean.	Plastic (nonfluorocarbon polymer) churn splitters must not be used to composite samples for determination of organic compounds. Although it can be used to split samples with particle sizes ≤ 250 µm and suspended-sediment concentrations ≤ 1,000 mg/L, splitting accuracy becomes unacceptable for particle sizes >250 µm and suspended-sediment concentrations >1,000 mg/L. When using the 14-L churn, sample volumes that total less than 4 L or greater than 13 L cannot be split for whole-water subsamples. Requires a modified spigot and construction of a funnel assembly. Samples for bacteria determinations are not to be taken from a churn splitter because the splitter cannot be autoclaved.
Fluorocarbon-polymer cone splitter	Used to process samples with suspended-sediment concentrations from 0 to 10,000 mg/L. Samples containing sediment particles ranging in size from very fine clay and silt (1 to 10 µm) to sand-size particles (250 µm) can be split. Samples as small as 250 mL can be split into 10 equal subsamples. Samples greater than 13 L can be processed. Can be used to process samples for both inorganic and nonvolatile organic analyses.	Accuracy of the volume equivalents must be verified before using a new or modified cone splitter. Splitter is awkward to operate and clean in the field. Sample is vulnerable to contamination from atmospheric sources or from improper operation. Splitting accuracy for sediment particles >250 µm or sediment concentrations >10,000 mg/L must be quantified by the user. Samples for bacteria determinations are not to be processed through the cone splitter because the splitter cannot be adequately sterilized. The cone splitter must be level for proper operation.

CHURN SPLITTER 2.2.1.A

The churn splitter is available in either polypropylene and polyethylene plastic (fig. 2-8*A*) or in fluoropolymer plastic (fig. 2-8*B*). Both churn types come in the 14-L size, but the plastic churn also is available in an 8-L size. Splitter advantages and limitations are described in table 2-6. The 8- or 14-L plastic churn splitter is recommended to composite and split surface-water samples for inorganic analyses. The 14-L fluoropolymer churn splitter is recommended to composite and split samples for either inorganic or nonvolatile organic analyses.

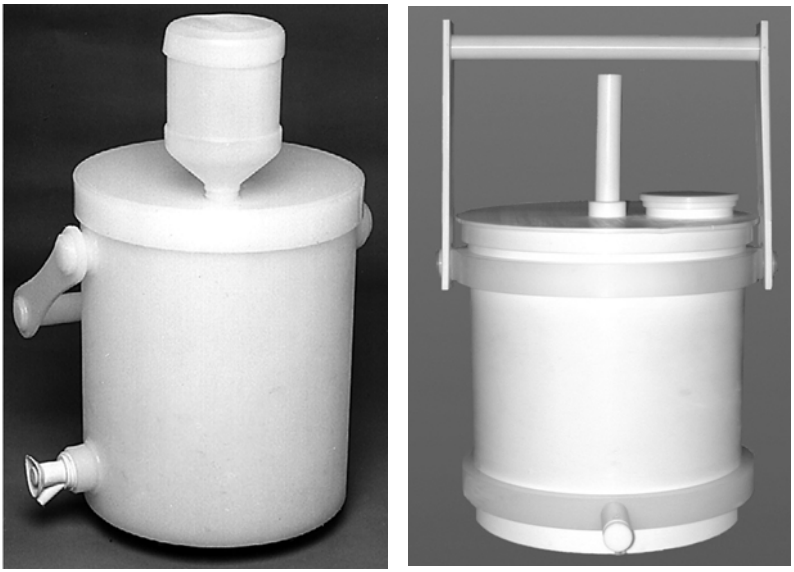

A. ***B.***

Figure 2-8. Churn sample splitters: (*A*) Plastic churn splitter (from Capel and Larson, 1996) and (*B*) Fluoropolymer churn splitter (from Federal Interagency Sedimentation Project Catalog: accessed December 9, 2002, at http://fisp.wes.army.mil/Catalog%20Page%20US%20SS-1.htm).

- **Trace-element samples:** Do not collect or extract samples for trace-element analyses from a metal container. Use either the plastic or fluoropolymer churn splitter.

- **Organic carbon samples:** Use only the fluoropolymer churn to collect or extract samples for organic-compound analysis. Stainless steel and glass containers also can be used to composite samples for dissolved organic compound analysis. Do not use a plastic churn or container.

- **Churn covering:** To keep the entire churn-splitter assembly clean during sampling and prevent potential contamination, the churn splitter is placed inside two pliable, clear plastic bags (double bagged). These bags should be large enough to completely enclose the churn splitter, including funnel and churn handle, with enough excess material so that the bag openings can be gathered, folded over, and kept closed.

- **Churn carrier:** The carrier is a white plastic container, with lid, large enough to hold the double-bagged churn splitter assembly.

  — The lid of the carrier serves both as a seal for the carrier and as a windbreak when the collected subsample is poured into the churn funnel.

  — The purpose of the carrier is to minimize contamination during transport. In exposed areas, such as bridges and roadways, the carrier can protect against atmospheric sources of contamination, particularly material from motor vehicles.

- **Volume of sample needed:**

  — Subsamples totaling 10 L can be withdrawn from the 14-L churn for whole-water analysis, whereas subsamples totaling 5 L can be withdrawn from the 8-L churn for whole-water analysis.

— Do not use the 4 L remaining in the 14-L churn and the 3 L remaining in the 8-L churn for total, total recoverable, or suspended-material subsamples. However, the sample mixture remaining in either churn can be used for filtered subsamples for the determination of dissolved constituents.

The spigot and lid of the plastic churn splitter must be modified, as described below:

- The original spigot contains a metal spring that introduces a potential source of metal contamination and should be replaced (Horowitz and others, 1994). Purchase the modified spigot from OWQRL, or replace the metal spring with a piece of tubing as follows:

  (1) Cut a 7/8-in. length of 6424-03 Masterflex® tubing. This length is very important to ensure proper operating of the modified spigot. Cut the tubing with a utility knife or something that will cut a straight edge; if edge is jagged, water may leak past the button and possibly contaminate samples.

  (2) Pop button off spigot with a small-blade screwdriver (or push the button in and pull the shaft away from the back).

  (3) Slide the tubing over the sleeve on the inside of the button.

  (4) Slide the tubing that is now attached to the button over the stopper shaft, and compress until the button locks into place.

- Funnel assembly for plastic churn lid: To meet requirements for trace-element sampling, a funnel assembly is inserted into a 1-in.-(2.54 cm-)diameter hole drilled through the lid of the churn splitter (fig. 2-8).

  — The funnel is used when pouring whole-water samples into the churn splitter so that the churn lid can be left on, thus minimizing exposure of the composite sample to atmospheric contamination.

  — To make the funnel assembly, cut the top section (at the shoulder line) from a 1-L polypropylene sample bottle and insert it into the hole drilled in the churn lid. Cut the bottom two-thirds from a 1-L Nalgene® or other larger diameter sampler bottle and use as a funnel cap.

2.2.1.B CONE SPLITTER

The cone splitter is a pour-through device constructed entirely of fluorocarbon polymers (fig. 2-9), and thus can be used to process samples for inorganic and nonvolatile-organic analytes. **The cone splitter may be used to process samples with particle sizes ≤250 micrometers (µm) and suspended-sediment concentrations ≤10,000 milligrams per liter (mg/L) (table 2-6).** The primary function of the cone splitter is to divide the sample simultaneously into as many as 10 equal-volume samples. Some cone splitters have a 2-mm mesh screen in the reservoir funnel to retain large debris, such as leaves and twigs, that could clog or interfere with the splitting process. Below the funnel is a short standpipe that directs sample water in a steady stream, into a splitting chamber that contains a notched, cone-shaped splitting head with 10 equally spaced exit ports around its base. There should be no ridges, benches, or surfaces inside the splitting chamber that could retain material or interfere with the splitting process. The cone splitter is supported either by tripod legs or with an adjustable clamp and stand.

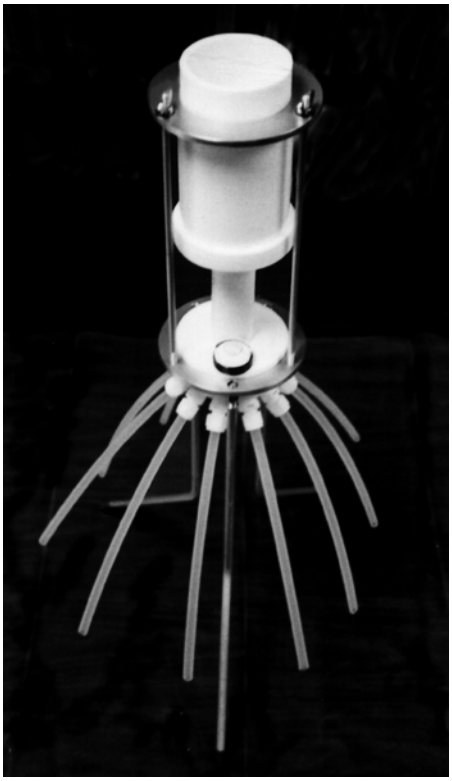

Figure 2-9. Cone splitter (from Capel and Larson, 1996).

The cone splitter is built to very close tolerances in order to achieve accurate and reliable operation. Bias to data can result from splitter imperfections or improper operation; therefore, calibration and proper use is necessary when processing samples.

Before using a new or modified cone splitter, test the splitter to be used as follows (Office of Water Quality Technical Memorandum 80.17):

1. Inspect the cone splitter housing and outlet ports. They should be smooth and symmetrical without any visible burrs or chips. **The cone splitter must be clean.**
2. Place the cone splitter on a stable platform or bench. **The splitter must be level for proper operation.** Use a bull's-eye level to check leveling and recheck during use; the level will change as personnel move inside the field vehicle.
3. Connect 10 discharge tubes to the outlet ports. The tubes must be the same length, and as short as possible. Label the outlets from 1 to 10.
   - All tubes must be pushed in as far as possible to the machined surface in the Swagelok® fitting in the cone-splitter ports. The ends should be flush with the bottom of the inside of the port.
   - Tubes need only extend into the receiving containers sufficiently to prevent spillage.
   - Tubes must not extend in so far that the ends become submerged.
4. Wet the cone splitter by pouring several liters of deionized water through it.
   - Lightly tap the system to dislodge adhering water drops, then discard the water.
   - Place an empty sample bottle under each outlet tube.
5. Accurately measure 3 L of deionized water into a 1-gallon narrow-mouth plastic bottle.
6. Rapidly invert the 1-gallon bottle over the reservoir, letting deionized water flow out as fast as possible. For proper operation, the standpipe must be discharging at its full flowing capacity.
7. After all deionized water has passed through the splitter, tap the assembly several times to dislodge adhering water drops.

Check for spills and leaks. If any are observed, stop the test, correct the problem, and repeat steps 1-7.

8. Measure the volumes of the 10 subsamples carefully, within an accuracy of ±1.0 mL. Record the volumes for each outlet on a form similar to table 2-7.

9. Repeat the test a minimum of three times. Use the same initial volume for each test.

Calculate and document the results of the cone-splitter accuracy test as follows:

1. Referring to the example in table 2-7, calculate the mean volume of each subsample ($\bar{x}$) and standard deviation (S_x):

$$\bar{x} = \frac{\Sigma x_i}{n} \text{ and}$$

$$S_x = \sqrt{\frac{\sum (x_i - \bar{x})^2}{n-1}},$$

where

x_i is the measured volume for each subsample and

n is the number of subsamples (outlet ports).

2. Calculate the standard deviation in percent (E_x):

$$E_x = \frac{S_x}{\bar{x}} \times 100.$$

3. Calculate the error for each subsample (E_i):

$$E_i = \frac{x_i - \bar{x}}{\bar{x}} \times 100.$$

4. Compute the mean standard error ($\overline{E}_{\bar{x}}$) for the three tests and document the maximum and minimum errors (E_i) for all tests in field notes.

5. If data-quality requirements warrant, note the error patterns for individual outlets to determine which outlets produce consistent bias and label them with their mean percent bias error. Depending on the objectives of the sampling effort, this pattern of error may not be of concern.

A cone splitter is considered acceptable for sample processing if the mean standard error ($\overline{E}_{\bar{x}}$) for the three tests is 3 percent or less, and no individual error (E_i) exceeds ±5 percent.

Table 2-7. Example of six cone-splitter accuracy tests using deionized water

[Modified from Office of Water Quality Technical Memorandum 80.17]

Test number	1		2		3		4		5		6		Averages	
Initial sample weight (grams)	2,499.4		2,499.5		2,499.5		2,499.5		2,499.5		2,499.4			
Outlet number	Outlet volume (x_i)	Percent (E_i)	Outlet volume (x_i)	Percent (E_i)	Outlet volume (x_i)	Percent (E_i)	Outlet volume (x_i)	Percent (E_i)	Outlet volume (x_i)	Percent (E_i)	Outlet volume (x_i)	Percent (E_i)	Mean volume (x_i)	Percent (E_i)
1	248.4	-0.5	249.5	-0.1	247.4	-0.9	248.1	-0.7	247.8	-0.8	249.2	-0.2	248.4	-0.5
2	246.8	-1.2	246.8	-1.2	245.6	-1.6	248.4	-.6	246.3	-1.4	246.7	-1.2	246.8	-1.2
3	249.4	-.1	251.0	.5	250.6	.4	251.1	.5	249.8	0	248.7	-.4	250.1	.1
4	250.7	.4	252.6	1.1	252.5	1.1	251.3	.6	251.8	.8	250.5	.3	251.6	.7
5	248.1	-.6	248.3	-.6	249.8	0	249.3	-.2	250.2	.2	248.1	-.6	249.0	-.3
6	252.2	1.0	250.3	.2	252.7	1.2	252.0	.9	252.7	1.2	250.6	.4	251.8	.8
7	245.7	-1.6	246.2	-1.4	246.0	-1.5	246.3	-1.4	246.6	-1.3	245.9	-1.5	246.1	-1.5
8	252.7	1.2	254.2	1.8	252.9	1.3	253.3	1.4	253.1	1.3	254.6	2.0	253.5	1.5
9	248.7	-.4	247.3	-1.0	247.5	-.9	247.1	-1.1	248.2	-.6	249.5	-.1	248.0	-.7
10	253.9	1.7	252.1	.9	251.8	.8	250.6	.3	251.7	.8	253.0	1.3	252.0	1.0
Final sample weight	2,496.6		2,498.3		2,496.8		2,497.5		2,498.2		2,496.8		2,497.4	
Sample loss	2.8		1.2		2.7		2.0		1.3		2.6			
Mean weight ($\bar{x}$)	249.7		249.8		249.7		249.8		249.8		249.7		249.8	
Standard deviation (S_x)	2.7		2.7		2.8		2.3		2.5		2.7			
Error percent (E_x)	1.1		1.1		1.1		.9		1.0		1.1			

2.2.2 PROCESSING AND PRESERVATION CHAMBERS

Working within sample-processing and -preservation chambers reduces the possibility of random atmospheric contamination during sample bottling, filtering, and preserving with chemical reagents. **Use of these chambers is required for samples for trace-element analyses** (Horowitz and others, 1994), and is recommended for most other analytes, such as major and minor inorganic ions and organic compounds. The processing chamber serves as a collection chamber into which sample water is pumped and either filtered or directly collected in sample bottles. There is no standard design for either fixed or portable chambers; however, to prevent contamination of inorganic samples with metals, the materials used in their construction should be either nonmetallic or completely covered by or embedded in nonmetallic material. Although bench testing of plastic chamber components, including the clear plastic cover, revealed no emission of volatile organic substances, this can be further substantiated by analyzing an ambient blank for VOC analysis that is collected within the chamber(s).

Fixed sampling chambers typically are enclosures that are permanently installed in a field vehicle for the sole purpose of sample collection/processing and preservation and must not be used as a storage area. Fixed and portable chambers need to be cleaned between uses. The portable chamber illustrated is inexpensive and easily constructed with ≤1/2-in.-diameter white polyvinyl chloride (PVC) pipe or tubes, which are used to support a transparent plastic-bag covering (fig. 2-10; Appendix). The transparent bag forms a protective tent within which to work while collecting, processing, or preserving samples. Another option is to purchase or construct a fixed or portable glove box. The glove box should have no metal parts to which a sample for metals analysis might be exposed. Use glove boxes that can be filled with an inert gas such as nitrogen or argon when samples need to be strictly isolated from contact with atmospheric gases.

- The processing chamber either sits over a fixed or portable sink or contains a basin to which a waste-disposal funnel or hose has been attached, allowing excess water to drain readily to waste. The sample tubing is inserted through a hole in the top of the chamber, and can be connected to a filtration device inside the chamber.
- The preservation chamber also consists of the frame and bag cover, but without provision for sample tubing. The bottled sample is passed from the processing chamber into the preservation chamber, in which chemical treatment is added to the sample. A suitable container placed inside the preservation chamber is needed in which spent preservative ampoules are contained (see NFM 5).

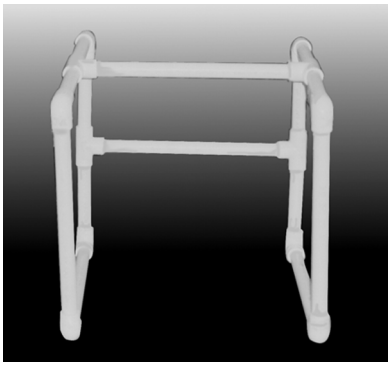

A.

B.

Figure 2-10. Example of (*A*) a polyvinyl chloride frame of a processing or preservation chamber, and (*B*) a sample being processed within the chamber.
(*A*, Photograph by B.A. Bernard; *B*, photograph by Jacob Gibs.)

Use of separate chambers for sample collection/processing and sample preservation generally is the most efficient approach. Space permitting, multiple preservation chambers can be used, each dedicated to a specific chemical treatment. Otherwise, use of a single preservation chamber dictates a change in the bag covering for each change in chemical treatment.

If there is insufficient space in which to set up both the processing and preservation chambers, the processing-chamber frame can also function as a preservation-chamber frame provided that the cover is changed before sample preservation, is clipped to the outside of the chamber frame rather than supported over the frame, and is changed every time the preservation procedure requires a change in gloves (NFM 5).

2.2.3 FILTRATION SYSTEMS

Filtration separates particulate substances (solid-phase and biological materials) from the solute or aqueous phase of a water sample. Water samples are filtered for analysis of inorganic constituents, organic compounds, and biological materials to help determine the environmental fate and quantify the transport of these target analytes. Additional information relevant to selection of filtration systems can be found in Kennedy and others (1976), Ward and Harr (1990), Horowitz and others (1994), Koterba and others (1995), and in NFM 5.

For surface-water applications, the most common filtration system consists of a reversible, variable-speed battery-operated peristaltic pump or a metering pump that forces the whole-water sample through tubing into a filtration assembly. For ground water, the sample ordinarily is pumped through a sample line directly into a disposable capsule filter or other filtration assembly. If the sample is collected by bailer, the sample is bottom-emptied through fluorocarbon-polymer tubing and either is composited in a churn or other vessel first or is transferred directly to the filtration assembly by means of a peristaltic pump. Some bailers can be directly connected to a filtration device and hand-pump system.

TECHNICAL NOTE: Separation of solid from aqueous phases can be achieved by methods other than filtration, and data requirements may dictate the need for an alternative method such as centrifugation, ultracentrifugation, dialysis or lipid-membrane separation, or reverse-flow osmosis and tangential-flow filtration.

The filtration assembly and filter material to be used depends on the class of target analyte(s) (table 2-8), as discussed below.

- Inorganic Samples—The filter membrane (filter) for filtering samples for analysis of inorganic constituents typically comprises material such as polyethersulfone, cellulose nitrate, or polycarbonate polymer. Polyethersulfone is the membrane material used in the disposable capsule filter that currently is in routine use by the USGS water-quality program.
- Organic Samples—Samples for organic-compound analysis are filtered through discs composed of glass fiber (microfiber) material. Organonitrogen-herbicide samples also can be filtered through disposable nylon membranes (Sandstrom, 1995). The membrane material described above for inorganic samples should not be used for organic samples.
- Organic-Carbon Samples—Samples to be analyzed for dissolved organic carbon either can be filtered through glass-microfiber filter (GF/F) discs or through the disposable capsule (polyethersulfone) filter; the choice of filter depends on study objectives and protocols. Any sample to be analyzed for total particulate carbon (TPC) must be filtered through a GF/F disc.

A filtered sample is defined operationally by the nominal pore size of the filter (membrane or disc).

- The filter pore size selected depends on study objectives, data requirements, and industry standards.

- The standard pore sizes of filters used by the USGS are:
  - 0.7 µm for pesticides, most other organic compounds, and some bacteria (NFM 7).
  - 0.45 µm for inorganic constituents (including major ions, radiochemicals, and trace elements), some bacteria (NFM 7), and dissolved organic carbon.
  - 0.2 µm or less for trace-element samples to be analyzed for some geochemical applications and interpretive studies and for nutrient samples for which exclusion of bacteria at the 0.2-µm threshold is desirable.
- See NFM 7 for a description of filters for biological analysis.

INORGANIC CONSTITUENTS 2.2.3.A

The standard device for filtering samples for analysis of inorganic constituents is the disposable capsule filter, which has replaced routine use of the plate-filter assembly for most applications (table 2-8). **Construction materials of filtering systems must not be a source of sample contamination with respect to the substances for which the sample will be analyzed.**

Disposable capsule filter

The protocol for filtering a sample for analysis of inorganic constituents requires using a disposable capsule filter[12] such as the Pall-Gelman AquaPrep 600 ground-water sampling capsule with pleated polyethersulfone (Supor®) filter membrane material (hereafter referred to as "capsule filter") (fig. 2-11).

g

[12]The disposable capsule filter with polyethersulfone membrane also may be used for processing samples for analysis of dissolved organic carbon (section 2.2.3.B, NFM 5.2.2.C).

Horowitz and others (1994) concluded that the disposable capsule filter would not be a probable source of sample contamination for inorganic constituents, including trace elements, major ions, nutrients, stable isotopes, and radiochemicals (**table 2-8**) if prerinsed with a minimum of 1,000 mL (1 L) of inorganic-grade blank water.

- Capsule filters are sealed units; hence, the likelihood of contamination is reduced because the filter membrane is not handled.
- The surface area of the capsule-filter membrane is roughly three times that of the 142-mm plate filter and is less subject to clogging.
- Cleaning the filtration device is not necessary because each capsule filter is discarded after one use.
- OWQRL checks the quality of each lot of capsule filters and provides a certificate of analysis with each filter.

Figure 2-11. Disposable capsule filter with 0.45-µm polyether- sulfone pleated filter membrane (published with permission of Gelman Sciences).

Do not reuse filters—discard the disposable polyethersulfone capsule filter after each sample.

Table 2-8. Capsule filter requirements and recommendations for processing of surface-water and ground-water samples

[Table modified from Horowitz and others (1994) and includes only those constituents evaluated in the experiments described in the reference and in Office of Water Quality Technical Memorandum 2000.08]

Disposable capsule filter required[1]		Disposable capsule filter recommended[2]
Aluminum	Lead	Anions (chloride, sulfate)
Antimony	Lithium	Calcium
Barium	Manganese	Magnesium
Beryllium	Molybdenum	Nutrients (nitrogen, phosphorus)
Boron	Nickel	Radiochemicals (excluding radon gas)
Cadmium	Silver	Silica
Chromium	Thallium	Sodium
Cobalt	Uranium	Strontium
Copper	Zinc	Dissolved organic carbon
Iron		

[1]The requirements for surface-water sampling described in Horowitz and others (1994) are generally applicable to ground-water studies.
[2]The plate-filter method is acceptable, contingent on use of equipment-cleaning protocols (NFM 3) and project data objectives.

Plate-filter assemblies

Before 1994, the most common filtration assembly used for USGS studies for filtering inorganic samples was the nonmetallic backflushing plate-filter assembly designed to hold a 142-mm filter. Because this method allows greater exposure of the sample to the air and because the assembly is time-consuming to field clean, this equipment generally is not recommended for routine filtering of inorganic samples (table 2-8).

- Types of plate-filter assemblies available for inorganic samples include:
  - Fluorocarbon polymer filtration assembly designed for 47-mm-diameter filters; can be used for in-line filtering of inorganic or organic samples by using an appropriate filter membrane.
  - Plastic vacuum filtration assembly for a 47-mm-diameter filter; used with either a hand vacuum pump or a peristaltic pump.
  - Plastic backflushing assembly, available for 142-mm- and 293-mm-diameter filters (no longer in common use for USGS studies) (fig. 2-12).

- A smooth-tipped plastic forceps is needed to transfer the filter to the plate of the filter assembly. Kennedy and others (1976) give detailed instructions for use of the plate-filter assembly.

Figure 2-12. Nonmetallic backflushing plate-filter assembly for 142-millimeter-diameter filter membrane. (Illustration reproduced with permission of Gelman Sciences.)

2.2.3.B ORGANIC COMPOUNDS

Filtering whole-water samples isolates suspended solid-phase substances from the aqueous phase, thus allowing separate determinations of organic compounds in each phase. Filtering also helps to preserve samples for organic determinations by removing microorganisms that could degrade compounds in the sample (Ogawa and others, 1981).

- Hydrophobic compounds are analytes that preferentially partition to particulate matter. Filtering concentrates particulate matter on the disc (filter), enhancing extraction efficiency and lowering analytical detection limits. This is especially useful for whole-water samples with small concentrations of suspended material and for which large volumes of sample (4 to 40 L) must be filtered to provide an analyzable mass of suspended materials.

- Hydrophilic compounds are analytes that are water soluble. Filtering is used to remove suspended material or other particulate matter from the water sample, to identify concentrations of dissolved analytes, and to remove any solid-phase substances containing constituents that could interfere with the analysis and that could be co-extracted with target analytes.

Equipment needed to filter samples for determination of trace organic compounds, such as pesticides, is described in detail in Sandstrom (1995) and includes a positive displacement pump, an aluminum plate-filter assembly (or other appropriate or designated filtration assembly), the filter, and metal forceps. All equipment and components used for filtering whole-water samples for trace organic determinations should be made of materials (a) that will not contaminate the sample or sorb analytes, and (b) that can withstand organic cleaning solvents without being damaged. Such materials include stainless steel or aluminum, fluorocarbon polymer, glass, and nonporous ceramics (hard-fused microcrystalline alumina). Use of plastics, rubber, oils, and other lubricants is to be avoided because it can result in sample contamination, analytical interference, and (or) sorptive losses.

Metering pump

The valveless piston metering pump consists of a pump head with a reciprocating piston driven by a 12-volt direct current (DC), variable-speed motor (fig. 2-13). It has a delivery rate of up to 500 mL per minute.

The pump head and all wetted parts are constructed of ceramic, fluorocarbon polymer, or stainless steel components, which are resistant to organic solvents. These pumps can tolerate some suspended materials in the sample being pumped, but large concentrations of suspended materials can cause excessive wear of pump parts and strain on the pump motor.

The ceramic piston and shaft of these pumps will break if motor amperage exceeds 4 amps. To avoid this, either a 4-amp DC circuit breaker connected in-line with the pump power line, or an alternating to direct current converter with 4-amp maximum output, should be used.

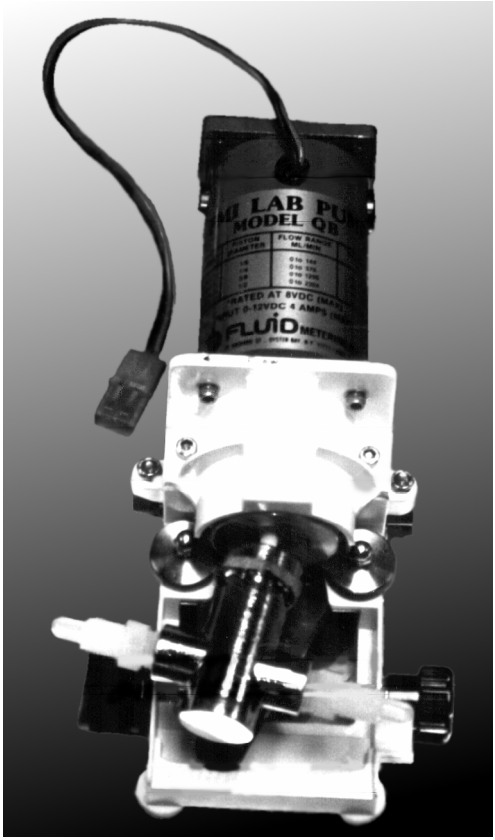

Figure 2-13. Valveless piston metering pump. (Photograph by B.A. Bernard, 1998).

The pump and filtration assembly are connected by 1/4-in.-diameter convoluted fluorinated ethylene polypropylene (FEP) tubing (fig. 2-14) with appropriate fittings. The convoluted tubing does not crimp when bent.

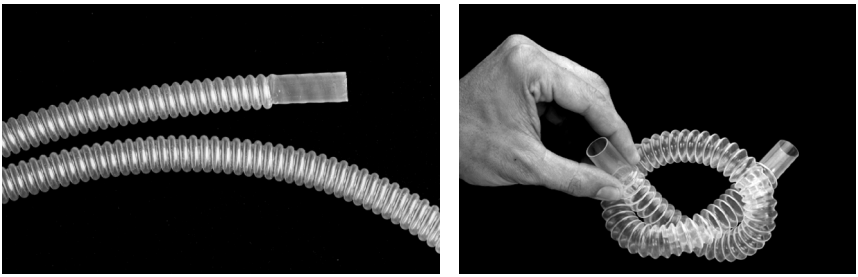

A. Convoluted (spiral) design ***B.*** Corrugated (parallel) design

Figure 2-14. Flexible fluorinated ethylene polypropylene (FEP) tubing: (*A*) convoluted design and (*B*) corrugated design. (Published with permission of Cole-Parmer Instrument Company: *A*, Copyright 1992. *B*, Copyright 1987. Cole-Parmer does not warrant these illustrations to be current, accurate, or suitable for any purpose.)

Filtration assemblies

The filtration equipment described below includes various types of plate-filter assemblies. Their use depends on the analysis to be requested or the field method selected. Plate-filter assemblies are available for filters with disc diameters ranging from 13 to 293 mm. The size selected is determined by the sample volume to be filtered and by the concentration of suspended materials in the sample. When collecting samples for analysis of organo-nitrogen herbicides and dissolved organic carbon, filtration options include specific types of disposable capsule filters.

- **Trace organic compounds:** Typical plate-filter assemblies used for pesticides and other selected trace organic analytes include either the three-legged aluminum (or stainless steel) plate-filter assembly (fig. 2-15*A*) or the PFA in-line filter-holder assembly (fig. 2-15*B*). The aluminum plate-filter assembly consists of two machined aluminum or stainless steel plates (designed to contain a 142-mm-diameter filter) held together by locking bolts or a locking ring.
  - The plates have fluorocarbon polymer-coated silicone or Viton® O-rings set in grooves to seal the filtration assembly. A stainless steel screen on the lower plate supports the filter. A valve is built into the upper plate to exhaust trapped air. Connectors are built into the center of the top and bottom plates so that inlet and outlet fluorocarbon polymer tubing can be attached.

— Teflon® in-line filter-holder assembly: PFA filtration assembly with Tefzel® ETFE clamp nut holds a 47-mm-diameter GF/F (0.7-µm nominal pore size). (Similar assemblies are available currently from commercial manufacturers, such as Savillex, Cole-Parmer, and Berghof.)

A. Aluminum plate-filter assembly

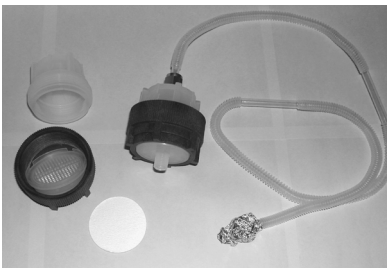

B. PFA filter holder

Figure 2-15. (*A*) Aluminum plate-filter assembly for 142-millimeter-diameter filter disc and (*B*) PFA filter holder for 47-millimeter-diameter filter. (Cole-Parmer EW-06621-40 PFS filter holder shown. Photograph published with permission of GeoTech Environmental Equipment, Inc.)

- **Organonitrogen herbicides:** Samples for analysis of organonitrogen herbicides may be filtered using an in-line 25-mm disposable nylon filter unit (nylon filter), as explained in the indented items that follow. (Alternatively, either a plate-filter assembly or PFA in-line filter-holder assembly can be used, as described above under "Trace organic compounds"). Although filtration devices made of plastic components should not be used to process water-sediment samples for determination of organic compounds, the nylon filter has been approved and is an efficient option for a specific solid-phase extraction (SPE) method for samples for organonitrogen-herbicide analysis (Sandstrom and others, 1994).

  — The in-line disposable nylon filter consists of a 25-mm-diameter nylon membrane, nominal 0.45-µm pore diameter, enclosed in a nylon housing with Luer-Lok inlet and outlet fittings. **The nylon filter must be discarded after one use.**

  — For detailed information regarding tubing connectors and other equipment needed for the nylon filter, and on how to connect the nylon filter to the sampling system, refer to NFM 5 and Sandstrom and others (1994).

  — The 25-mm filter unit is appropriate for the SPE method because the required volume of filtered sample is only about 100 mL.

- **Dissolved and particulate carbon:** Dissolved organic carbon (DOC) samples are processed through either a Savillex florinated ethylenepropylene (FEP) pressure-filtration assembly, or a disposable Supor® capsule filter, depending on other carbon analyses required (NFM 5.2.2.C). Total particulate carbon (TPC) samples are processed through a Savillex pressure filtration assembly (fig. 2-16), loaded with a baked 25-mm, 0.7-micron pore size, glass-microfiber filter (GF/F) on a 25-mm stainless steel or polysulfone filter-support screen.

- Either a hand-pressure pump or a peristaltic pump fitted with clean tubing can be used to move the TPC and particulate inorganic carbon (PIC) sample through the Savillex filtration assembly. Pressure can also be exerted using organic-free nitrogen gas in a pressure tank with a regulator.
- A persitaltic pump or submersible ground-water pump can be used to move the DOC sample through the capsule filter.

A detailed description of the methods and equipment needs for carbon-analysis sampling can be found in NFM 5.2.2.C, "Procedures for processing samples for carbon analysis." See also the equipment lists provided below in section 2.4.

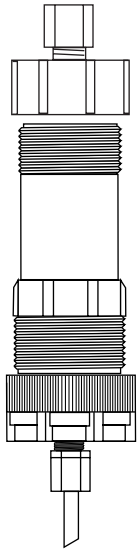

Figure 2-16. Fluorinated ethylene-propylene pressure-filtration (FEP) assembly for processing samples for analysis of total particulate carbon and dissolved organic carbon. (Published with permission from the Savillex Corporation.)

Filter material

Tortuous-path depth filters made of borosilicate glass fibers are used to filter most samples for organic determination because the material is basically inert, can withstand organic solvents, and can withstand laboratory preparation (being baked at 450°C). **Membrane filters (cellulose, polycarbonate, or polyethersulfone polymers) commonly used to process samples for determination of nutrients and other inorganic constituents are not suitable for filtering samples for most organic determinations,** mainly because they are not resistant to organic solvents used to preclean the sampling and processing equipment. DOC samples, however, may be processed through the polyethersulfone capsule filter (disposable Supor® filter) (NFM 5) if study objectives permit.

- Use glass microfiber filters (GF/F) with 0.7-µm nominal pore size that has been baked at 450°C for at least 2 hours. (USGS personnel can obtain baked 142-mm- and 25-mm-diameter GF/F from OWQRL.) The 25-mm GF/F is used in the Savillex filtration assembly.
- Use only filters without binders. (Acrylic resin binders might leach from the filter and contaminate samples, or might not be completely combusted when baked at 450°C.) Binder-free glass-fiber filters are available in various diameters ranging from 13 to 293 mm.
- For the filter material used in processing organonitrogen herbicides and dissolved organic carbon see the previous section on "Filtration assemblies." For the DOC sample, use a 25-µm, 0.7-mm GF/F if the Savillex unit is used.

2.2.4 PUMP TUBING

Pump tubing refers to the sample lines used with peristaltic, metering, and submersible pumps. Field personnel are cautioned to evaluate possible artifacts in a sample associated with pump tubing and tubing connections. For filtering ground-water samples that are pumped directly from the well to a filtration assembly, C-Flex® or fluorocarbon polymer tubing is generally recommended.

- Tubing connectors and connections that contact the sample should be made of inert material, to the extent possible. Stainless steel connections must be the highest grade available (SS 316). If flexible copper, aluminum, or stainless steel tubing is used for chlorofluorocarbon (CFC) sampling, it should be refrigeration grade. Such fittings ordinarily are delivered with coatings of machining lubricants, which must be removed by cleaning before use.
  - Greaseless fittings can be ordered. Fluorocarbon polymer, silicone, C-Flex® pump tubing commonly are used with portable submersible pumps and with peristaltic or metering pumps. Use of a fluorocarbon polymer material generally is recommended because fluorocarbon polymers are relatively inert with respect to many inorganic and organic analytes (table 2-9).

- Silicone tubing is suitable when sampling for inorganic analytes only, and only after appropriate cleaning (see NFM 3).
  - Measurable concentrations of silica (0.09 to 0.24 mg/L) have been detected in blank samples passed through silicone tubing (Horowitz and others, 1994). These concentrations are likely to be significant only if low ionic-strength water is being sampled.
  - Silicone tubing was not designed for use with acids.
  - Silicone tubing is gas permeable and very sorptive of organic compounds.

Table 2-9. Common varieties and characteristics of fluorocarbon polymer tubing

FEP (fluorinated ethylene polypropylene) • Most transparent • Best abrasion resistance • High flexibility • Least expensive of the Teflon® varieties
PFA (perfluoroalkoxy) • Less transparent than FEP • Virtually nonporous (nonpermeable) • Most expensive of the Teflon® varieties
PTFE (polytetrafluoroethylene) • Least transparent; milky to white • Most flexible • Midpriced between FEP and PFA
Kynar® (polyvinylidene fluoride) • Translucent • Not very flexible • Less expensive than the Teflon® varieties
Tefzel® (Ethylene tetrafluoroethylene) • Withstands higher pressure than Teflon® • Most expensive

- C-Flex® tubing is made from a thermoplastic elastomer and is suitable for use when sampling for all inorganic analytes and DOC.
  - C-Flex® is relatively resistant to acid. Acid resistance is a factor because dilute hydrochloric acid is required in some cleaning procedures (see NFM 3).
  - C-Flex® is less permeable to gas than silicone tubing.
- Fluorocarbon polymer tubing is recommended when sampling for most inorganic and organic analytes. Fluorocarbon polymer tubing is available in corrugated and convoluted, as well as in straight-wall configurations (fig. 2-14).
  - Fluorocarbon polymer tubing premolded to the shape of the pump head is available.
  - Convoluted fluorocarbon polymer tubing is flexible and easy to handle. Attach convoluted tubing to each end of the premolded tubing.
  - Fluorocarbon polymer tubing sheathed in another plastic is available at lower cost but is not recommended because the fluorocarbon polymer twists, constricts, and readily cracks.

- Polyvinyl chloride (PVC) tubing (Tygon®) is suitable for inorganic samples only, and must be appropriately cleaned prior to contact with inorganic samples.
  - PVC tubing can be washed with dilute acid.
  - PVC tubing has the lowest gas permeability of any peristaltic pump tubing.
  - When used with a peristaltic pump, PVC tubing has a shorter life than silicone, C-Flex®, or Norprene®.
  - PVC tubing may leach plasticizers.
- Nylon, polyethylene, and polypropylene are all inexpensive, rigid tubing that can withstand high pressure and are suitable for sampling inorganic analytes. Nylon tubing is more resistant to organic compounds than other plastic tubing, but has not been tested as a source of trace-element or organic-compound contamination.

- Norprene® tubing is made from a thermoplastic elastomer (a polypropylene base with USP mineral oil) and is suitable when sampling for inorganic analytes only. It must be appropriately cleaned prior to contact with samples collected for inorganic analysis. (Norprene® tubing has the longest life of any manufacturer-recommended tubing material.)
  - Norprene® tubing can be washed with dilute acid.
  - Norprene® tubing may leach USP mineral oil.
  - For use with a peristaltic pump.
  - The gas permeability of Norprene® tubing is lower than that of silicone tubing and greater than that of PVC tubing.

FIELD VEHICLES 2.3

***By* S.L. Lane, Sarah Flanagan, and D.B. Radtke**

Water samples should be processed within vehicles that are designed, designated, prepared, and dedicated for that purpose. If a multiple-use vehicle must be used for water-quality work, then use of portable processing and preservation chambers is mandatory, and additional quality-control samples must be collected to document that the quality of the data has not been compromised. Contamination of some target analytes is much more likely when multiple-use vehicles are used for collection of water-quality data.

Whether using a field vehicle dedicated for water-quality work or a multi-use vehicle, every effort must be made to keep the work area clean and to eliminate sources of sample contamination.

- Keep metallic objects, such as surface-water and ground-water sampling support equipment, out of the inorganic sample-processing and -preservation area.
- Install a dustproof barrier between the vehicle's cab and the sample-processing and -preservation area.
- Cover metallic surfaces (cabinets or shelving that cannot be replaced) with plastic sheeting. Replace the sheeting periodically.
- Store chemical substances so that chemical fumes will not enter the sample-processing and -preservation area.
- If transporting a nitrogen tank, make sure the tank is fastened securely to the vehicle with a bracket. Gas-supply outfits sell brackets specially designed for gas tanks/cylinders.

For additional discussions of field-vehicle recommendations and requirements, refer to Horowitz and others (1994), Shelton (1994), and Koterba and others (1995).

CAUTION: Store acids, bases, and solvents in separate storage areas so that the chemicals cannot mix if a spill occurs (NFM 9).

LISTS OF EQUIPMENT AND SUPPLIES 2.4

By **S.L. Lane, Sarah Flanagan, and D.B. Radtke**

Checklists of the equipment and supplies commonly used to collect and process water samples are provided in the tables that follow (tables 2-10 through 2-17) to aid field personnel in selecting equipment needed to prepare for a water-quality field trip. These lists are not exhaustive and should be modified to meet specific study needs. Many of the items listed are explained in greater detail in other NFM chapters, as indicated. Refer to other chapters of this *National Field Manual* series for lists of equipment and supplies for field measurements (NFM 6), biological indicators (NFM 7), and bottom-material samples (NFM 8). Equipment must be cleaned and tested before field work begins (NFM 3).

Do not forget backup equipment.

Table 2-10. Support equipment for surface-water sampling

[A detailed description of the various types of support equipment is beyond the scope of this manual; refer to Corbett and others (1943), Buchanan and Somers (1969), and Rantz and others (1982).]

Cranes		
✓	**Type**	**Sampler maximum recommended weight (pounds)**
	Type A	100
	Type E	300[1]
	Bridge board	50
	Other	

Crane Bases		
✓	**Type**	**Sampler maximum recommended weight (pounds)**
	Three-wheel	100
	Four-wheel	150

✓	Miscellaneous
	Battery or hydraulic power motor system for B-56 or E-53 reel
	Hanger bars, connectors, and pins for connecting sampler to cable
	Counterweights for four-wheel crane base
	Safety equipment (flotation jacket, cable cutter, bridge safety plan, traffic cones, and warning signs)
	Vertical transit rate pacer (US VTP-99)
	Other

Reels[2]						
✓	**Reel**	**Cable diameter (inches)**	**Maximum weight (pounds)**	**Cable capacity (feet)**	**Brake**	**Operation type**
	A-55	0.084 .10	50 100	95 80	No	Hand
	B-56	.10 .125	150 200	144 115	Yes	Hand or power
	E-53	.10 .125	150 300	206 165	Yes	Power
	Other					

[1]CAUTION: As of this publication date, a 275- to 300-pound sampler has not been tested for use with 275- to 300-pound weights.
[2]Selection of type of reel should be based largely on maximum cable length needed and weight of sampler that must be supported.

Table 2-11. Support equipment for ground-water sampling

✓	Ground-water support equipment
	Handline or manual/power reel with line
	Tripod assembly with manual or power reel
	Wellhead guide for flexible sample line to pump
	Wheeled carts to transport portable sampling equipment
	Energy source for reels and pumps (batteries, compressor, or generator)
	Other

Table 2-12. Sample-collection equipment for (*A*) surface water and (*B*) ground water

[NFM, *National Field Manual for the Collection of Water-Quality Data*]

✓	(*A*) Surface-water-quality sample collection (refer to NFM 4)
	Weighted bottle and handline (plastic or stainless steel) bottle
	US D-95 (plastic dipped) Bottle (1 liter) Nylon or fluorocarbon polymer nozzle[1] (3/16, 1/4, or 5/16 inch) and cap
	US DH-81 (handle and collar) Nylon or fluorocarbon polymer nozzle[1] (3/16, 1/4, or 5/16 inch) and cap Plastic or fluorocarbon polymer bottle (0.5 or 1 liter)
	US DH-95 (plastic dipped) Bottle (1 liter) Nylon or fluorocarbon polymer nozzle[1] (3/16, 1/4, or 5/16 inch) and cap
	US D-96 Bag and US D-96-A1 (plastic dipped) Slotted bottle (plastic) Nylon or fluorocarbon polymer nozzle[1] (3/16, 1/4, or 5/16 inch) and cap PFA (perfluoroalkoxy) bag
	US D-99 Bag (plastic coated) Nylon or fluorocarbon polymer nozzle[1] (3/16, 1/4 or 5/16 inch) PFA bag
	Crane with 3- or 4-wheel base and counterweights
	Reel, hanger bars, and pins
	Current meter for US DH-95, US D-95, US D-96, US D-96-A1, and US D-99
	Bridge board and reel
	Plastic sheeting with weighted corners to cover bridge rail, 2 millimeters thick
	Vertical transit rate pacer
	Biochemical Oxygen Demand sampler
	Volatile Organic Compound sampler
	Thief sampler
	Pumping sampler(s)
	Other

Table 2-12. Sample-collection equipment for (*A*) surface water and (*B*) ground water—*Continued*

✓	(*B*) Ground-water-quality sample collection (refer to NFM 4)
	Positive-displacement submersible pump, discharge line, and reel
	Water-supply-well sample line and garden-hose threaded adaptor
	Thief-type sampler. (Examples: bailer, single or double-check valve, and bottom emptying device)
	Suction-lift pump (peristaltic or centrifugal)
	Antibacksiphon device
	Sample-water manifold to split sample water flow
	Flowthrough chamber for field-measurement electrodes (pH, conductivity, dissolved oxygen, water temperature, oxidation/reduction)
	Tubing, appropriate for type of pump and target analytes
	Tubing connectors, compatible with tubing and target analytes
	Water-level measuring tape, steel or electric, and bleach solution[2]
	Water-level indicator (blue chalk for steel tape)
	Weight, to attach to water-level measuring tape or sample line. **Do not use lead.** Use stainless steel or other relatively noncontaminating material.
	Power source for pump or reel; batteries for electronic sounder
	Graduated bucket (to measure rate of discharge) and stopwatch
	Containers for disposal of purge water
	Flow controller for sampling pump
	Plastic sheeting, 2 millimeters or thicker
	Other

[1]Use only nozzles purchased from the Federal Interagency Sedimentation Project.
[2] If measuring water level from a drinking-water well, decontaminate equipment by dipping the wetted section into a 10-percent bleach/water solution, followed by rinsing with deionized water. Dry the steel tape to prevent rusting.

Table 2-13. Sample-processing equipment and supplies

[NFM, *National Field Manual for the Collection of Water-Quality Data;* L, liter; mm, millimeter; µm, micrometer; in., inch; g, gram; mL, milliliter]

✓	**Sample splitters (refer to NFM 5)**
	Plastic churn splitter, 8 L or 14 L, modified spigot and funnel (NFM 2.2.1.A) (inorganic analytes) Fluoropolymer churn splitter, 14 L (organic and (or) inorganic analytes) Modified spigot or Master Flex 6424-03 tubing to modify metal-spring spigots
	Churn carrier
	Cone splitter • Splitting chamber for cone splitter • Bull's-eye bubble level and shims for cone splitter
	Large clear plastic bags: protective • Covering for transporting clean churn splitter or cone splitter
	Subsample bottle kits for whole-water samples
	Other: Gloves (powderless, disposable nitrile)
✓	**Filtration systems for inorganics (refer to NFM 5)**
	Peristaltic pump and batteries
	Pump tubing for ground-water and peristaltic pump (C-Flex™, silicone, fluorocarbon polymer)
	Filtration assembly (disposable capsule, plate-type, other)
	Filter membranes and discs (various diameters, pore sizes, and materials)
	Forceps (plastic or ceramic)
	Subsample bottle kits for filtered inorganic samples
	Deionized water: Inorganic grade blank water (IBW) or Universal blank water (UBW)
	Other: Gloves (powderless, disposable nitrile)
✓	**Filtration systems for organics (refer to NFM 5)**
	Plate-filter assembly, aluminum or stainless steel, for 13-, 142-, or 293-mm-diameter filter disc or PFA filter holder for 47-mm-diameter filter disc
	Filter disc, borosilicate glass fiber (GF/F), 0.7-µm pore size, baked 142-mm, or 13-, 47-, or 293-mm-diameter filter disc, as required
	Pump, ceramic piston valveless metering, with fluorocarbon polymer convoluted tubing or ground-water pump tubing, and batteries
	Filtration assembly, 25-mm-diameter, in-line, with disposable nylon filter
	Subsample bottle kits
	Volatile/pesticide-grade blank water (VPBW)
	Pesticide-grade blank water (PBW)
	Forceps (metal or ceramic)
	Other: Gloves (powderless, disposable nitrile)
✓	**Miscellaneous processing equipment and supplies**
	Sample processing chamber; supply of transparent plastic covers (bags) for portable chamber and disposable nonpowdered gloves to handle equipment
	Other: Gloves (powderless, disposable nitrile)

Table 2-13. Sample-processing equipment and supplies—*Continued*

✓	**Filtration system for carbon analysis (refer to NFM 5)**
	Fluorocarbon-polymer filtration assembly and baked glass-microfiber filter discs (25 mm, 0.7-µm pore size)
	Disposable capsule filter for dissolved organic carbon sample analysis, if consistent with study protocols and objectives
	Hand pressure or peristaltic pump
	C-flex tubing with in-line 0.2-µm air filter
	Cylinder, graduated, glass
	Holding stand, ring, and medium three-prong clamp
	Forceps, stainless steel
	Whirl-Pak bags (6 ounce and 18 ounce)
	Aluminum foil squares
	Cooler and ice
	Organic grade water
	Power source for pump (battery, generator, other)
	Other: Gloves (powderless, disposable nitrile)
✓	**Solid-phase extraction (SPE) system (refer to NFM 5)**
	Valveless piston metering pump (ceramic) with fluorocarbon polymer convoluted tubing
	Fluorocarbon polymer tubing, 1/8-in. outside diameter
	Various tubing fittings, adaptors, connectors, and unions
	Portable balance, 1 to 6,000 g
	Graduated glass cylinders
	Beaker (plastic), 1,000 mL
	Spike mixture and micropipette kit
	Surrogate mixture and micropipette kit
	SPE column (C-18 or Carbopac-B™); checklist and reporting form
	Methanol, ascorbic acid, sodium chloride, and pesticide-grade organic water, all in fluorocarbon polymer dispenser bottles
	Gloves (powderless, disposable nitrile)
	Stopwatch
	Aluminum foil

Table 2-13. Sample-processing equipment and supplies—*Continued*

✓	**Tritium/Helium-3 ($^3H/^3He$) age dating sampling system (see NFM 5)**
	Copper sample tubes; two tubes per well[1]
	500-mL safety-coated glass bottle with polycone seals
	Back-pressure-valve assembly[2]
	• Whitey valve SS-1RS6, 3/8-in. stainless steel valve • Swagelok 3/8-in. nylon ferrule sets, NY-600 set (10 each set) • A small length of 3/8-in. clear tubing (allows you to watch for air bubbles)
	Reducing union to connect sample line to 3/8-in. sample tube
	Socket wrench with 13-mm socket is used to turn the bolts that close the pinch-off clamps
✓	**Passive diffusion bag (PDB) samplers for investigating selected volatile organic compounds (see NFM 5)**
	1- to 2-ft-long low-density polytheylene (LPDE) lay-flat tube[3]
	Polyethylene mesh (sleeve for PDB)
	Deionized water (used to initially fill the PDB before deployment)
	Weighted line or fixed pipe (to hold PDB in place in well)
	Cable ties or stainless steel spring clamps (to hold PDB to weighted line or fixed pipe)
	Heat source to seal ends of PDB

[1]Obtain information online at Reston Chlorofluorocarbon Laboratory by completing a Sample Tube Request Form (http://water.usgs.gov/lab/cfc) (accessed 5-12-2003). Samples are shipped to Lamont-Doherty Earth Observatory in Palisades, NY, for analysis.
[2] NWQL Technical Memorandum 97.04S provides photographs and diagrams of sampling equipment.
[3] Vroblesky (2001) includes photographs of sampling equipment and deployment.

Table 2-14. Sample-preservation equipment and supplies

[NFM, *National Field Manual for the Collection of Water-Quality Data*; N, normal; HCl, hydrochloric acid]

✓	Preservation equipment and supplies (refer to NFM 5)
	Preservation chamber(s)
	Chamber covers (large, transparent bags)
	Waste containers for spent preservative ampoules, dedicated for each chemical used
	Chemical reagents (such as nitric, hydrochloric, and sulfuric acids) and project requirements for sample preservation for the analytes targeted and analytical method selected. Note that although several analytes might require the same type of acid preservative, the normality, volume, and grade specified by the laboratory may differ; it is important to follow explicit laboratory directives concerning the chemical treatment of a sample.
	Nitric acid (analytical grade)
	6N ultrapure hydrochloric acid vial (for mercury sample)
	Sulfuric acid
	HCl for volatile organic compound sample
	Phosphoric acid/cupric sulfate
	Sodium hydroxide
	Ascorbic acid
	Zinc acetate
	Phytoplankton kit
	Radon kit
	Cooler, ice or chilling agent
	Other: for example, apron, goggles, gloves (powderless, disposable nitrile)

Table 2-15. Cleaning and quality-control sampling equipment and supplies

[NFM, *National Field Manual for the Collection of Water-Quality Data;* FEP, fluorinated ethylene polypropylene]

✓	**General cleaning equipment and supplies (refer to NFM 3)**
	Basins or standpipes (clear or white plastic, fluorocarbon polymer, stainless steel)
	Brushes (nonmetallic, clear or white)[1]
	Detergent, laboratory phosphate-free (0.1 to 2 percent by volume)
	Tap water
	Deionized water, District-produced or equivalent (ASTM International Type 1) (Office of Water Quality Technical Memorandum 92.01), distilled water purchased from commercial supplier
	Wash bottles
	Material Safety Data Sheet for each chemical to be used
	Sealable plastic bags without color closure strips and large plastic storage bags
	Other safety equipment, for example • Laboratory coat or apron • Goggles • Gloves • Eyewash station • Acid spill kit; solvent spill kit • Safety shower
✓	**Inorganic constituents**
	Hydrochloric acid, analytical grade (5 percent by volume)
	Neutralization container and marble chips
	Wash bottle for hydrochloric acid
	Inorganic-grade blank water (IBW) (National Water Quality Technical Memorandum 92.01) (Office of Water Quality Technical Memorandum 2002.14)[2]
	Large plastic bags (clear or white)
	Plastic sheeting (clear or white)

Table 2-15. Cleaning and quality-control sampling equipment and supplies—*Continued*

[NFM, *National Field Manual for the Collection of Water-Quality Data;* FEP, fluorinated ethylene polypropylene]

✓	Organic Compounds
	Methanol, pesticide grade[3]
	Waste container, methanol[3]
	Wash bottle, methanol (FEP-grade plastic)[3]
	Aluminum foil
	Fluorocarbon polymer bags/sheeting
	Pesticide- or volatile-grade blank water (PBW or VPBW)[2]
	Deionized water, district-produced or equivalent (ASTM International Type 1)

[1]Restaurant-supply stores are an excellent source for these types of brushes.
[2] Refer to Office of Water Quality Technical Memorandum 2002.14 for description of a universal blank water. USGS personnel should obtain blank water from OWQRL "One-Stop Shopping" Web site using the following item numbers:
IBW - Q378 FLD
Universal blank water - N1580 or N1570
VPBW - N1580 or N1570
PBW - N1590 or N1600
[3] Methanol supplies must not be used for contact with samples for organic carbon analysis.

Table 2-16. Shipping equipment and supplies

[NFM, *National Field Manual for the Collection of Water-Quality Data*]

✓	Shipping equipment and miscellaneous shipping supplies (refer to NFM 5)
	Coolers, 1 to 5 gallon
	Boxes (sturdy)
	Packing material (foam sleeves, bubble wrap)
	Ice
	Large plastic bags for lining coolers and boxes
	Sample-bottle labels
	Analytical Services Request (ASR) form
	Return-address label and account number
	Sealable plastic bag for forms and return label
	Tape, fiber
	Shipping label (forms)

Table 2-17. Miscellaneous field supplies

[NFM, *National Field Manual for the Collection of Water-Quality Data*]

✓	Miscellaneous field supplies (refer to NFM 5)
	Notebook and pen (indelible ink)
	Field instruments (NFM 6; Office of Water Quality Technical Memorandum 94.02)
	Calibration logbook for each instrument (NFM 6)
	Field folder(s) with station, site, and well information and permission form
	Field documentation forms
	Calculator and extra batteries
	Watch
	Tagline
	Stopwatch and headset for discharge measurement
	Hip boots
	Chest waders
	Rain gear
	Personal flotation device
	Traffic safety vest, cones, signs, warning lights
	First aid kit
	Highway emergency kit
	Tool kit
	Tape (electrical, fiber, fluorocarbon polymer, other)
	Plastic-coat spray
	Fire extinguisher
	Flashlight with extra batteries
	Backup batteries for sampling devices
	Keys to sampling site, security locks, and vehicle (extra set)
	Weather report
	Field trip itinerary (copy to supervisor); sampling and safety plans, Job Hazard Analysis form
	Cellular phone or two-way radio
	Camera with extra film and batteries
	Work gloves
	Shovel, ice chisel/auger
	Boat, motor, gasoline, oil, paddle, oars
	Drinking water
	Soap (antibacterial)
	Paper towels (lint free)
	Safety plan(s) (NFM 9)
	Map(s)
	Locations and phone numbers of hospitals and other emergency facilities (NFM 9)
	USGS photo ID should be with all field personnel at all times in the field.
	Other

CONVERSION FACTORS, SELECTED TERMS, AND ABBREVIATIONS

CONVERSION FACTORS

Multiply*	By	To obtain
inch (in.)	25.4	millimeter (mm)
square inch (in^2)	645.16	square millimeter (mm^2)
foot (ft)	0.3048	meter (m)
gallon (gal)	3.785	liter (L)
pound, avoirdupois (lb)	0.4536	kilogram
meter (m)	3.281	foot
centimeter (cm)	0.3937	inch
micrometer (μm)	3.9372×10^{-5}	inch
millimeter (mm)	0.03937	inch
liter (L)	0.2642	gallon
milligrams per liter (mg/L)	0.5841	grains per gallon
milliliter (mL)	0.0338	ounce, fluid
milliliter (mL)	2.64×10^{-4}	gallon
milligram (mg)	3.527×10^{-5}	ounce, avoirdupois
gram (g)	0.03527	ounce, avoirdupois
kilogram (kg)	2.205	pound

***Example:** 1 in. x 25.4 = 25.4 mm.

Vertical datum: Vertical coordinate information is referenced to the North American Vertical Datum of 1988 (NAVD 88). (The term "sea level" is no longer used to express vertical datum in publications of the Water Resources Discipline of the U.S. Geological Survey.)

Temperature: Water and air temperature are given in degrees Celsius (°C), which can be converted to degrees Fahrenheit (°F) by use of the following equation:

$$°F = 1.8(°C) + 32$$

SELECTED TERMS

Analyte (target analyte): "Substances being determined in an analysis" (from Bennett, Harry, ed., 1986). The term "target analyte" is used in this report to refer to any chemical or biological substance for which concentrations in a sample will be determined. Target analyte does not include field-measured properties such as temperature, conductivity, dissolved-oxygen concentration, pH, Eh, alkalinity, color, or turbidity.

Fluorocarbon polymers and fluoropolymers: Fluorocarbon polymers (polyfluorocarbons) or fluoropolymers are composed of monomers (smallest repeating compound segment of polymer) consisting of carbon, fluorine, hydrogen, and, for one polymer, oxygen. The fluoropolymers have tradenames that include, for example, Teflon® and Tefzel® (ethylene tetrafluoroethylene) (products of the DuPont Company) and Kynar® (a polyvinylidene fluoride, a product of the Atofina Chemicals Company). Common types of fluoropolymers include FEP (fluorinated ethylene polypropylene), PFA (perfluoroalkoxy), PTFE (polytetrafluoroethylene), and PVDF (polyvinylidene fluoride). Each fluorocarbon polymer has different chemical and physical properties; however, all are relatively nonreactive chemically at ambient temperatures and do not leach monomers.

Trace element(s): For the purpose of this report and to maintain consistency with common usage, the term "trace element(s)" is used to refer to metals and other elements such as arsenic, antimony, selenium, and tellurium that usually are present in natural surface- and ground-water systems in concentrations less than 1 mg/L (modified from Hem, 1985). Common usage of this term, as defined above, is inexact and not rigorous with respect to the aqueous chemistry discipline.

Whole water: Water as sampled from its source and not subjected to filtration or other phase-separation process. Common synonymous terms include: raw (water) sample and unfiltered (water) sample.

SELECTED SYMBOLS

~	approximately
>	greater than
≤	less than or equal to
±	plus or minus

ABBREVIATIONS

BOD	biochemical oxygen demand
CFC	chlorofluorocarbon
DC	direct current
DIW	distilled/deionized water
DOC	dissolved organic carbon
ETFE	ethylene-tetrafluorethylene
ft/s	feet per second
FEP	fluorinated ethylene polypropylene
gal/min	gallon per minute
GF/F	glass microfiber filters
HIF	USGS Hydrologic Instrumentation Facility, Stennis Space Center, Mississippi
IBW	inorganic-grade blank water
L/min	liter per minute
lb/in^2	pounds per square inch
mg/L	milligrams per liter
NFM	*National Field Manual for the Collection of Water-Quality Data*
NWQL	USGS National Water Quality Laboratory
OWQRL	Ocala Water Quality and Research Laboratory
PBW	pesticide-grade blank water (water certified free of pesticide compounds)
PDB	passive diffusion bag sampler
PFA	perfluoroalkoxy

ABBREVIATIONS—*Continued*

PIC	particulate inorganic carbon
PTFE	polytetrafluoroethylene
PVC	polyvinyl chloride
PVDF	polyvinylidene fluoride
SPE	solid-phase extraction
SS	stainless steel
TPC	total particulate carbon
TWRI	Techniques of Water-Resources Investigations
USGS	U.S. Geological Survey
USP	United States Pharmacopeia
VOC	volatile organic compounds
VPBW	volatile/pesticide grade blank water

SELECTED REFERENCES AND TECHNICAL MEMORANDUMS

SELECTED REFERENCES FOR SELECTION OF EQUIPMENT FOR WATER SAMPLING

American Public Health Association, American Water Works Association, and Water Environment Federation, 1992, Standard methods for the examination of water and wastewater (18th ed.): Washington, D.C., American Public Health Association, variously paged.

Ammex Corportation, 2002, The Ammex glove guide, accessed June 13, 2002, at www.ammex.com.

ASTM, 1999, Annual book of ASTM standards--Standard guide for sampling fluvial sediment in motion: West Conshohocken, PA, v. 11.02, p. 498-515.

Bennett, Harry, ed., 1986, Concise chemical and technical dictionary (4th ed.): New York, Chemical Publishing Co., 1,271 p.

Buchanan, T.J., and Somers, W.P., 1969, Discharge measurements at gaging stations: U.S. Geological Survey Techniques of Water-Resources Investigations, book 3, chap. A8, 65 p.

Busenberg, E., and Plummer, L.N., 1992, Use of chloro-fluorocarbons (CCl_3F and CCl_2F_2) as hydrologic tracers and age-dating tools—Example, the alluvium and terrace system of central Oklahoma: Water Resources Research, v. 28, no. 9, p. 2257–2283.

Capel, P.D., and Larson, S.J., 1996, Evaluation of selected information on splitting devices for water samples: U.S. Geological Survey Water-Resources Investigations Report 95-4141, 103 p.

Capel, P.D., Nacionales, F.C., and Larson, S.J., 1995, Precision of a splitting device for water samples: U.S. Geological Survey Open-File Report 95-293, 6 p.

Cole-Parmer, on-line catalog accessed March 11, 2003, at http://www.coleparmer.com

Corbett, D.M., and others, 1943, Stream-gaging procedure—a manual describing methods and practices of the Geological Survey: U.S. Geological Survey Water-Supply Paper 888, 245 p.

Driscoll, F.G., 1986, Groundwater and wells (2d ed.): St. Paul, Minn., Johnson Filtration Systems, Inc., 1,089 p.

Edwards, T.K., and Glysson, D.G., 1999, Field methods for measurement of fluvial sediment: U.S. Geological Survey Techniques of Water-Resources Investigations, book 3, chap. C2, 89 p.

Federal Interagency River Basin Committee, Subcommittee on Sedimentation, 1952, The design of improved types of suspended sediment samplers—Inter-Agency Report 6: Minneapolis, Minn., St. Anthony Falls Hydraulics Laboratory, 5 p.

Federal Interagency Sedimentation Project, accessed July 12, 2002, at http://fisp.wes.army.mil

Federal Interagency Sedimentation Project [catalog], US SS-1 fluoropolymer "churn" sample splitter: accessed December 9, 2002, at http://fisp.wes.army.mil/Catalog%20Page%20US%20SS-1.htm

Federal Interagency Sedimentation Project, Operating instructions for the US D-96 depth-integrating collapsible bag suspended-sediment sampler: accessed December 12, 2002, at http://fisp.wes.army.mil/Operators_Manual_US_D-96_020709.pdf.

Federal Interagency Sedimentation Project, Operator's manual for the US DH-81 depth-integrating suspended-sediment sampler: accessed December 12, 2002, at http://fisp.wes.army.mil/Operators_Manual_for_the_US_DH-81_010612.pdf.

Federal Interagency Sedimentation Project, Using the US VTP-99 vertical transit rate pacer: accessed December 12, 2002 at http://fisp.wes.army.mil/Instructions%20US%20VTP-99%20990722.pdf.

Federal Interagency Sedimentation Project, 2000, Report LL, Development of the US D-95 suspended-sediment sampler: accessed December 12, 2002, at http://fisp.wes.army.mil/000619%20Report%20LL,%20US%20D-95.pdf.

Federal Interagency Sedimentation Project, 2000, Report MM, Development of the US DH-95 suspended-sediment sampler: accessed December 12, 2002, at http://fisp.wes.army.mil/000619%20Report%20MM,%20US%20DH-95.pdf.

Federal Interagency Sedimentation Project, 2000, Sampling with the US D-95 depth-integrating suspended-sediment sampler: accessed December 12, 2002 at http://fisp.wes.army.mil/Instructions%20US%20D-95%20000608%20.pdf.

Federal Interagency Sedimentation Project, 2001, Report PP, The US D-96—An isokinetic suspended-sediment/water-quality collapsible-bag sampler: accessed December 12, 2002, at http://fisp.wes.army.mil/011114%20Report%20PP,%20US%20D-96.pdf.

Federal Interagency Sedimentation Project, 2002, The US XD-99™: accessed December 12, 2002, at http://fisp.wes.army.mil/In_Development_US_XD-99.htm

Ficken, J.R., 1988, Recent development of downhole water samplers for trace organics, *in* Collins, A.G., and Johnson, A.I., eds., Ground-water contamination—field methods: Philadelphia, American Society for Testing and Materials Special Technical Publication 963, p. 253–257.

Gibs, Jacob, Brown, G.A., Turner, K.S., MacLeod, C.L., Jelinski, J.C., and Koehnlein, S.A., 1993, Effects of small-scale vertical variations in well-screen inflow rates and concentrations of organic compounds on the collection of representative ground-water-quality samples: Ground Water, v. 31, no. 2, p. 201–208.

Gillham, R.W., 1982, Syringe devices for ground-water sampling: Ground Water Monitoring Review, v. 2., no. 2, p. 36-39.

Harte, P.T., Brayton, M.J., Ives, Wayne, 2000, Use of passive diffusion samplers for monitoring volatile organic compounds in ground water: U.S. Geological Survey Fact Sheet 088-00, 4 p.

Hem, J.D., 1985, Study and interpretation of the chemical characteristics of natural water (3d ed.): U.S. Geological Survey Water-Supply Paper 2254, 263 p.

Horowitz, A.J., Demas, C.R., Fitzgerald, K.K., Miller, T.L., and Rickert, D.A., 1994, U.S. Geological Survey protocol for the collection and processing of surface-water samples for the subsequent determination of inorganic constituents in filtered water: U.S. Geological Survey Open-File Report 94-539, 57 p.

Horowitz, A.J., Smith, J.J., and Elrick, K.A., 2001, Selected laboratory evaluations of the whole-water sample-splitting capabilities of a prototype fourteen-liter Teflon® churn splitter: U.S. Geological Survey Open-File Report 01-386, 12 p.

Imbrigiotta, T.E., Gibs, Jacob, Fusillo, T.V., Kish, G.R., and Hochreiter, J.J., 1988, Field evaluation of seven sampling devices for purgeable organic compounds in ground water, *in* Collins, A.G., and Johnson, A.I., eds., Ground-water contamination—field methods: Philadelphia, American Society for Testing and Materials Special Technical Publication 963, p. 258–273.

Izbicki, John, Christensen, Allen, and Hanson, Randy, 1999, U.S. Geological Survey combined well-bore flow and depth-dependent water sampler: U.S. Geological Survey Fact Sheet 196-99, 2 p.

Keith, L.H., 1988, Principles of environmental sampling: Washington, D.C., American Chemical Society, ACS Professional Reference Book, 458 p.

Keith, L.H., ed., 1991, Compilation of EPA's sampling and analysis methods: Chelsea, Mich., Lewis Publishers, 803 p.

Kennedy, V.C., Jenne, E.A., and Burchard, J.M., 1976, Backflushing filters for field processing of water samples prior to trace-element analysis: U.S. Geological Survey Open-File Report 76-126, 12 p.

Koterba, M.T., Wilde, F.D., and Lapham, W.W., 1995, Ground-water data-collection protocols and procedures for the National Water-Quality Assessment Program—Collection and documentation of water-quality samples and related data: U.S. Geological Survey Open-File Report 95-399, 113 p.

Lapham, W.W., Wilde, F.D., and Koterba, M.T., 1995, Ground-water data-collection protocols and procedures for the National Water-Quality Assessment Program—Selection, installation, and documentation of wells, and collection of related data: U.S. Geological Survey Open-File Report 95-398, 69 p.

_____1997, Guidelines and standard procedures for studies of ground-water quality—selection and installation of wells, and supporting documentation: U.S. Geological Survey Water-Resources Investigations Report 96-4233, 110 p.

LeBlanc, D.R., Garabedian, S.P., Hess, K.M., Gelhar, L.W., Quadri, R.D., Stollenwerk, K.G., and Wood, W.W., 1991, Large-scale natural gradient tracer test in sand and gravel, Cape Cod, Massachusetts. 1. Experimental design and observed tracer movement: Water Resources Research, v. 27, no. 5, p. 895–910.

Margaritz, Mordeckai, Wells, Mona, Amiel, A.J., and Ronen, Daniel, 1989, Application of a multi-layer sampler based on the dialysis cell technique for the study of trace metals in groundwater: Applied Geochemistry, v. 4, p. 617–624.

Morrison, R.D., 1983, Ground water monitoring technology—Procedures, equipment and applications: Prairie Du Sac, Wis., TIMCO Manufacturing, Inc., 111 p.

Norris, J., 1988, Techniques for sampling surface and industrial waters—Special considerations and choices, *in* Keith, L.H., ed., Principles of environmental sampling: Washington, D.C., American Chemical Society, p. 247–253.

Ogawa, I., Junk, G.A., and Scev, H.J., 1981, Degradation of aromatic compounds in groundwater, and methods of sample preservation: Talanta, v. 28, p. 725–729.

Plumb, R., Jr., 1981, Procedures for handling and chemical analysis of sediment and water samples: Vicksburg, Miss., U.S. Army Corps of Engineers Waterways Experiment Station, Environmental Laboratory, Technical Report EPA/CE-81-1, p. 3-73 to 3-76.

Radtke, D.B., 1985, Sediment sources and transport in Kings Bay and vicinity, Georgia and Florida, July 8-16, 1982: U.S. Geological Survey Professional Paper 1347, 120 p.

Radtke, D.B., Buell, G.R., and Perlman, H.A., 1984, Limnological studies of West Point Reservoir, Georgia-Alabama: U.S. Army Corps of Engineers Water Quality Management Study Technical Report, COE SAM/PDEE -84/004, 527 p.

Rantz, S.E, and others, 1982, Measurement and computation of streamflow, volume 1, measurement of stage and discharge: U.S. Geological Survey Water-Supply Paper 2175, 284 p.

Sandstrom, M.W., 1995, Filtration of water-sediment samples for the determination of organic compounds: U.S. Geological Survey Water-Resources Investigations Report 95-4105, 13 p.

Sandstrom, M.W., Wydoski, D.S., Schroeder, M.P., Zamboni, J.L., and Foreman, W.T., 1994, Methods of analysis by the U.S. Geological Survey National Water Quality Laboratory—Determination of organonitrogen herbicides in water by solid-phase extraction and capillary-column gas chromatography/mass spectrometry with selected-ion monitoring: U.S. Geological Survey Open-File Report 91-519, 26 p.

Sarkis, Karen, 2000, Protecting hands against chemical exposures: Occupational Hazards, accessed May 12, 2003, at http://www.findarticles.com

Savillex Corporation, 1994, Teflon PFA, molded products for science and industry: Minnetonka, Minn., Catalog 15, 24 p.

Savillex Corporation, online catalog accessed March 11, 2003, at http://www.savillex.com

Shelton, L.R., 1997, Field guide for collecting samples for analysis of volatile organic compounds in stream water for the National National Water-Quality Assessment Program: U.S. Geological Survey Open-File Report 97-401, 14 p.

Shelton, L.R., 1994, Field guide for collecting and processing stream-water samples for the National Water-Quality Assessment program: U.S. Geological Survey Open-File Report 94-455, 42 p.

Smith, R.L., Harvey, R.W., and LeBlanc, D.R., 1991, Importance of closely spaced vertical sampling in delineating chemical and microbiological gradients in groundwater studies: Journal of Contaminant Hydrology, v. 7, p. 285–300.

Szalona, J.J., 1982, Development of a bag-type suspended-sediment sampler: Minneapolis, Minn., St. Anthony Falls Hydraulics Laboratory, Federal Inter-Agency Sedimentation Project, Report Y, 32 p.

Torstensson, Bengt-Arne, and Petsonk, A.M., 1988, A hermetically isolated sampling method for ground-water investigations, *in* Collins, A.G., and Johnson, A.I., eds., Ground-water contamination—field methods: Philadelphia, American Society for Testing and Materials Special Technical Publication 963, p. 274–289.

University of California, Davis Environmental Health and Safety, 2002, Safety net#50, Guidelines for the selection of chemical-resistant gloves, accessed June 12, 2002, at http://www.ehs.ucdavis.edu/sftynet

U.S. Environmental Protection Agency, 1980, Samplers and sampling procedures for hazardous waste stream: Cincinnati, Ohio, Municipal Environmental Research Laboratory, EPA 600/2-80-018, 70 p.

_____1982a, Sampling protocols for collecting surface water, bed sediment, bivalves, and fish for priority pollutant analysis: Washington, D.C., Office of Water Regulations and Standards Monitoring and Data Support Division, EPA 68-01-6195, variously paged.

_____1982b, Handbook for sampling and sample preservation of water and wastewater: Cincinnati, Ohio, Environment Monitoring and Support Laboratory, EPA 600/4-82-029, 402 p.

_____1983, Addendum to handbook for sampling and sample preservation of water and wastewater: Cincinnati, Ohio, Environment Monitoring and Support Laboratory, EPA 600/4-82-029, 28 p.

_____1987, A compendium of Superfund field operations methods: Washington, DC., Office of Emergency and Remedial Response, EPA 540-P-87/001, 508 p.

_____1989, Soil sampling quality assurance user's guide: Las Vegas, Nev., Environment Monitoring Systems Laboratory, EPA 600/8-89-046, 268 p.

U.S. Geological Survey, 1978, Sediment, chap. 3 *in* U.S. Geological Survey, National handbook of recommended methods for water-data acquisition: p. 3-1 to 3-100.

_____1984, Chemical and physical quality of water and sediment, chap. 5 *in* U.S. Geological Survey, National handbook of recommended methods for water-data acquisition: p. 5-1 to 5-194.

_____1992a, Indiana District tests ground-water sampling devices, *in* WRD Instrument News, Debra Tracey, ed.: Stennis Space Center, Miss., Hydrologic Instrumentation Facility, no. 57, p. 1.

U.S. Geological Survey, 1992b, Ground-water sampler testing in a standpipe system, *in* WRD Instrument News, Debra Tracey, ed.: Stennis Space Center, Miss., Hydrologic Instrumentation Facility, no. 59, p. 6.

_____Techniques of Water Resources Investigations Reports, accessed December 12, 2002, at http://water.usgs.gov/pubs/twri/

Vroblesky, D.A., 2001, User's guide for polyethylene-based passive diffusion bag samplers to obtain volatile organic compound concentrations in wells—Part 1—Deployment, recovery, data interpretation, and quality control and assurance: U.S. Geological Survey Water-Resources Investigations Report 01-4060, 18 p.

Vroblesky, D.A., ed., 2001, User's guide for polyethylene-based passive diffusion bag samplers to obtain volatile organic compound concentrations in wells—Part 2—Field Tests: U.S. Geological Survey Water-Resources Investigations Report 01-4061, variously paged.

Ward, J.R., and Harr, C.A., eds., 1990, Methods for collection and processing of surface-water and bed-material samples for physical and chemical analyses: U.S. Geological Survey Open-File Report 90-140, 71 p.

Winterstein,T.A., and Stefan, H.G., 1983, Suspended sediment sampling in flowing water, laboratory study of effects of nozzle orientation, withdrawl rate and particle size: Minneapolis, Minn., University of Minnesota, St. Anthony Falls Hydraulic Laboratory External Memorandum M-168, 97 p.

TECHNICAL MEMORANDUMS OF THE U.S. GEOLOGICAL SURVEY, WATER DISCIPLINE

Office of Water Quality, Office of Surface Water, and National Water Quality Laboratory Technical Memorandums are available electronically on the Internet through the USGS Web site on the World Wide Web. The site address (URL) is http://water.usgs.gov/admin/memo/ (accessed January 8, 2003).

Water Quality

Memo No.	Title	Date
qw78.06	WATER QUALITY: Field filtering of water samples for chemical analysis	April 5, 1978
qw80.17	EQUIPMENT AND SUPPLIES: New sample splitter for water-quality samples	July 3, 1980
qw92.01	Distilled/Deionized Water for District Operations	December 20, 1991
qw94.02	EQUIPMENT: Discontinuance of field use of mercury liquid-in-glass thermometers	November 22, 1993
qw97.06	Comparison of the suspended-sediment splitting capabilities of the churn and cone splitters	May 5, 1997
qw2000.05	Particulate organic carbon	April 28, 2000
qw2000.08	New method for particulate carbon and particulate nitrogen	June 1, 2000
qw2002.09	Water-quality field methods phaseout of US D-77 and Frame-type samplers	January 25, 2002
qw2002.14	Availability of universal blank water for inorganic and organic analyses	April 18, 2002

Surface Water

Memo No.	Title	Date
sw94.05	Maximum sampling depths and transit rates for suspended sediment and water-quality samplers	January 31, 1994

National Water Quality Laboratory (NWQL)

Memo No.	Title	Date
92.01	Availability of equipment blank water for inorganic and organic analysis	March 25, 1992
97.04S	Collection, processing, and analysis of ground-water samples for tritium/helium-3 dating	April 7, 1997

APPENDIX: CONSTRUCTION OF A COLLAPSIBLE SAMPLE-PROCESSING/PRESERVATION CHAMBER

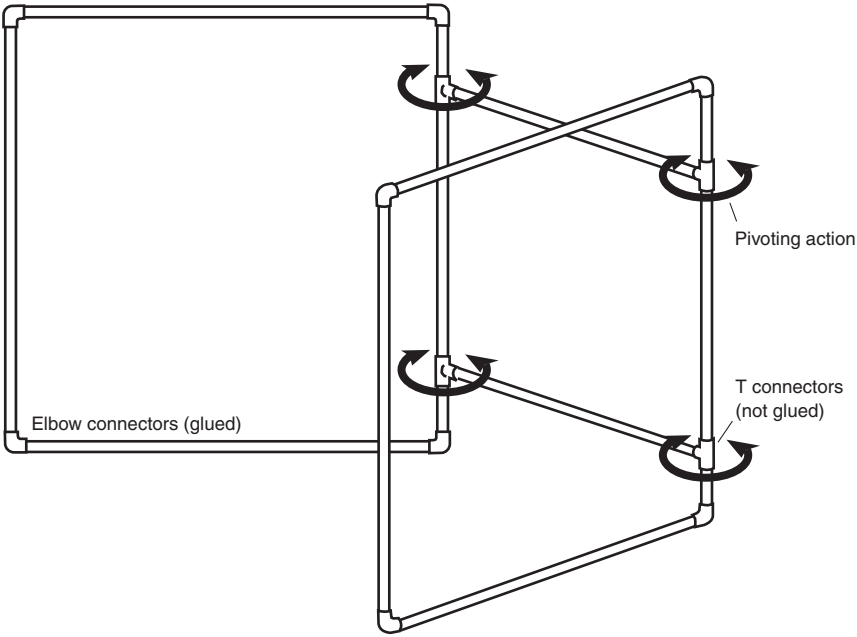

This frame can be pulled apart at the 4 joints that are left unglued, and will swivel or fold at these joints. Schedule 40 polyvinyl chloride pipes can be used for greater rigidity. Dimensions of chamber depend on its use (processing or preservation) and the space available in the vehicles.