U.S. GEOLOGICAL SURVEY
STORM SURGE SENSOR NETWORK

STANDARD OPERATIONS PLAN

Internal Document
Administrative Use Only

TABLE OF CONTENTS—

Table of Contents 3

List of Acronyms 7

BACKGROUND 8

OBJECTIVE 8

CHAPTER 1: ROLES AND RESPONSIBILITIES 8

1.1 Hierarchy of Responsibilities 9
1.1.1 Project Oversight 9
1.1.2 Storm Surge Centers (SSC) 9
1.1.3 Water Science Centers (WSC) 9

1.2 Coordination and Communication 9
1.2.1 Prior to Start of Hurricane Season 9
1.2.2 Prior to Landfall 10
1.2.3 Pre-Deployment Meeting 10
1.2.4 Field Deployment 10
1.2.5 Pre-Recovery Meeting 11
1.2.6 Field Recovery 11
1.2.7 Post-Recovery Communication 11

1.3 Safety of FRT Personnel 11
1.3.1 Field Response Team 11
1.3.2 Communications Center 11
1.3.3 12-hour Deadline 12

1.4 Contact with Non-USGS Persons in the Field 12

CHAPTER 2: DESIGNING A STORM SENSOR NETWORK 12

2.1 General Design Concept of a SSS Network 12
2.1.1 Pre-Determined Sites 13
2.1.2 Opportunistic Sites 13

2.2 Site Selection Factors 13
2.2.1 Sensor Location in the Water Column 13
2.2.2 Expected Surge Height 14
2.2.3 Variability in Projected Storm Paths 14
2.2.4 Datum Control 15
2.2.5 Barrier Islands 15
2.2.6 Accessibility 15
2.2.7 Proximity to Population Centers 16
2.2.8 Proximity to Existing Real-Time Gages 16

2.2.9 Quality-Assurance of SSS....16
2.2.10 Location of Barometric Pressure Sensors....16
2.2.11 Local WSC Data Needs....16

CHAPTER 3: SENSORS AND HOUSINGS....17

3.1 Sensor types....17
3.1.1 Onset HOBO pressure sensors....17
3.1.2 In-Situ TROLL pressure sensors....18

3.2 Sensor programming....18

3.3 Housing Design....18
3.3.1 Housing Pipe....18
3.3.2 Housing Cap....19
3.3.3 Sensor Eye Bolt....19
3.3.4 Ratchet Strap....19
3.3.5 USGS Visual Identity sticker....19
3.3.6 Construction of SSS Housing....19

CHAPTER 4: PRE-DEPLOYMENT MEETING....21

CHAPTER 5: SENSOR DEPLOYMENT PROCEDURES....22

5.1 General Deployment Procedures....22

5.2 Use of GPS for Deployment....23

5.3 Deployment Inspection Form....23

5.4 Establishment of Reference Points....24

5.5 Determination of Temporary Sensor Elevation....24

5.6 Digital Photographs....24

5.7 Call-In Procedures....26

5.8 Evacuation of Landfall Area....26

CHAPTER 6: LANDFALL STAND-BY PROCEDURES....26

6.1 Verification of Site Summary Spreadsheet....27

6.2 Creation of Site maps....27

6.3 Collection and Copying of All Deployment Inspection Forms....28

6.4 Collection and Processing of Digital Images and GPS Information.....28

CHAPTER 7: PRE-RECOVERY MEETING.....28

CHAPTER 8: SENSOR RECOVERY PROCEDURES 29

8.1 General Recovery Procedures.....29

8.2 Use of GPS Units for Recovery 30

8.3 Recovery Inspection Form.....30

8.4 Determination of Temporary Sensor Elevation 31

8.5 High-Water Marks 31

8.6 Digital Photographs 31

8.7 Call-In Procedures 32

8.8 Completion of SSS Recovery Effort.....33

8.9 Surveying Site Elevations 33

CHAPTER 9: POST-STORM WRAP-UP 33

9.1 Downloading and Shutting Down the SSSs.....33

9.2 Collection of All Equipment, Forms, and Files from FRTs 35

9.3 Cleaning of the Deployed Equipment and Housings.....35

9.4 Preparation for the Next Storm 35

CHAPTER 10: DATA MANAGEMENT. 35

10.1 Reconciling Data Files with Site Summary Spreadsheet.....35

10.2 Verification of Site Datums 35

10.3 Processing and Quality-Assurance of SSS Data Files 35

10.4 Creation of Data File Repository 36

10.5 Archival of Data in NWIS 37

CHAPTER 11: DATA PRESENTATION 37

APPENDIX A: STORM SURGE CENTER (SSC) COORDINATORS 38

APPENDIX B: SSC COMMUNICATIONS CENTER TEAM MEMBERS 39

APPENDIX C: SSC FIELD RESPONSE TEAM (FRT) LEADERS 40

APPENDIX D: EQUIPMENT AND SUPPLIES 41

APPENDIX E: CONTRUCTION INSTRUCTIONS FOR A SSS HOUSING 44

APPENDIX F: SSS DEPLOYMENT INSPECTION FORM 45

APPENDIX G: EXAMPLE OF SITE SUMMARY SPREADSHEET 47

APPENDIX H: SSS RECOVERY INSPECTION FORM 49

LIST OF ACRONYMS—

CC	Communications Center
dGPS	Differential Global Positioning System surveying equipment
EMA	Emergency Management Agency
FISC	Florida Integrated Science Center (USGS)
UCT	Greenwich Mean Time
GPS	Global Positioning System
NHC	National Hurricane Center (NOAA)
NOAA	National Oceanographic and Atmospheric Administration
NWIS	National Water Information System (USGS)
NWS	National Weather Service (NOAA)
OC	Office of Communications (USGS)
OSW	Office of Surface-Water
PFD	Personal Floatation Device
POC	Point Of Contact
RM	Surveying Reference Mark
RP	Measuring Reference Point
SSC	Storm Surge Center (Ruston, Atlanta, Orlando)
SSS	Storm Surge Sensor
FRT	Field Response Team
USGS	United States Geological Survey
UTC	Universal Coordinated Time
WSC	Water Science Center (USGS)

Storm Surge Sensor Network Operations Plan

BACKGROUND

The recent devastation caused by hurricanes along the Gulf Coast of the United States has renewed the interest in improving the modeling and prediction of these powerful storms and the subsequent surge. Historically, models were calibrated according to instantaneous high-water marks, recovered where possible after the event. However, these marks did not allow for analysis of timing and duration of surge events. Now, new non-vented pressure transducers (storm-surge sensors) allow for the collection of continuous water-level data in short data intervals that will allow for better understanding of the dynamics of hurricane surge for more accurate modeling and prediction capabilities—allowing for improved structure designs and response for public safety. While the USGS Water Science Centers (WSCs) have extensive experience in deploying resources for river measurements and monitoring, the deployment of the Storm-Surge Sensors (SSS) is a relatively new concept that will be undertaken infrequently, and may involve long, shifting spans of coastlines across many states as the paths of hurricanes evolve in the days and hours proceeding landfall. In addition, as hurricanes approach, WSC personnel may have other operational or personal priorities that hamper their involvement in SSS deployments. To mitigate these problems, three storm surge centers (SSC) have been created in Atlanta, GA., Orlando, FL., and Ruston, LA., to coordinate, lead, and staff SSS operations.

This document outlines the standardized set of operating procedures and interactions among the SSCs and WSCs, with specific chapters on roles and responsibilities, sensor deployment, sensor recovery, data management, and data presentation.

OBJECTIVE

The objective of this project is to capture data needed to describe storm-surge and inland flooding associated with a hurricane landfall and process and disseminate that information in a meaningful and timely manner, usually within 2-3 weeks after SSS recovery.

Storm-surge sensor deployments are targeted for the first hurricane of the season and hurricanes of Category 3 or above predicted to make landfall anywhere along the Gulf Coast of the United States. But deployment may be curtailed or limited, if conditions (extent of flooding, etc.) do not warrant a larger effort. Furthermore, no deployment necessitates datum surveys if flooding is limited or the storm is uneventful. The same procedures may also be used to document hurricanes that make landfall on the Atlantic Coast.

CHAPTER 1: ROLES AND RESPONSIBILITIES

The storm-surge project must be a collaborative effort. Because operations may extend across various state boundaries, knowledge of the roles and responsibilities involved in the SSS effort is crucial to a safe and successful deployment. Required knowledge includes the hierarchy of responsibilities, the requirements for coordination and

communication, the criteria in place to ensure the safety of the Field Response Team (FRT) personnel, and communications with non-USGS persons while in the field, and a familiarity with the locality and state and local agencies who will control pre- and post-storm assess to it.

1.1 Hierarchy of Responsibilities—There are three layers of responsibility for the SSS network project.

1.1.1 *Project Oversight.*—The oversight of the entire SSS effort is the responsibility of the USGS Office of surface Water (OSW). The OSW oversees the funding, authorizes deployments, and coordinates SSCs. Official media contacts should be approved through the USGS Office of Communications (OC) via OSW.

1.1.2 *Storm Surge Centers.*—Working closely with the affected WSC's, the SSCs coordinate the deployment and recovery of the SSSs, and the processing, and dissemination of the surge data. Most importantly, the SSCs will lead the FRT a 2-person field unit that actually deploys the SSSs, and contribute personnel to form the Storm Communications Center (CC). Each SSC also stores and maintains a cache of SSS and associated equipment. The SSC will provide storm-surge information and help WSCs select appropriate SSS sites.

1.1.3 *Water Science Centers.*—Depending on the availability of WSC personnel, the WSCs will:

- select sites for the SSS deployment consistent with project objectives;
- brief state and local law enforcement and emergency management agencies about planned SSS activities;
- obtain permission to access potential sites as needed;
- contact the local National Weather Service (NWS) Storm Warning Coordination Meteorologist (see http://www.weather.gov/os/wem-soo.pdf) to explain the anticipated field activities, and request special warning and advisory support; and
- provide personnel to pair-up with SSC personnel to form FRTs and the CC. WSC personnel are encouraged to assist with SSS recovery and to lead surveying efforts.

Listing of current representatives for each level can be found in Appendix A.

1.2 Coordination and Communication—Careful planning and continuous communication is required for a successful SSS deployment. Specific timeframes of certain activities occur each hurricane season.

1.2.1 *Prior to Start of Hurricane Season.(March-April)***—**Each SSC will designate a SSC coordinator who will act as the Point of Contact (POC) for that SSC between OSW and the other SSCs (Appendix A). At least one

alternate should be identified. The SSC coordinators will maintain ongoing communications for the development and revision of the SSS network operations plan, determine equipment and budget priorities, and coordinate data management and publishing activities. Each WSC will identify a POC and a back-up POC that will coordinate with the SSCs. A contact list of names and numbers will be distributed between the SSC's and WSC's.

Additionally, each SSC should identify candidates available for participation on a CC when needed (Appendix B).

1.2.2 *Prior to landfall.(1 week)*—The USGS Storm Response Team (SRT) convene regional conference calls to assess and coordinate USGS storm response activities. As hurricane conditions evolve, the need for, scope, and timing of a SSS deployment will become clear. In response, the affected WSCs, the responding SSCs, and OSW will initiate planning for the deployment. Relevant contact numbers will be exchanged and the WSC(s) will be briefed on the general deployment and safety plan.

At this time, participating WSCs may identify personnel who are available to assist the FRTs. If WSCs personnel have other operational or personal priorities, personnel from other non-affected WSCs will be recruited to assist the FRTs. Affected WSC(s) will secure access permissions, including any appropriate documents, to the deployment areas so that storm-surge sensors (SSS) may be deployed and recovered. Also, the WSCs will compile the locations and contact numbers for any relevant emergency services and shelters. The WSC(s) should also assist in identifying the first night's hotel accommodations for the incoming FRTs.

1.2.3 *Pre-Deployment Meeting.*—A pre-deployment meeting is critical to designate FRT deployment area responsibilities, make final selection of sites, review the deployment and safety plans, and prepare equipment (Appendix D). This pre-deployment meeting could take place in a USGS office or hotel conference room, but whatever meeting room is used, internet and phone capabilities will be needed. At this meeting, all communication plans, evacuation time, fall-back locations, and hotel reservations should be completed.

1.2.4 *Field Deployment.*—Each FRT will travel to its area of responsibility. After completion of each deployment, or on an hourly basis, whichever occurs first, the FRT will check in with the CC. After each deployment, the following information should be relayed to the CC:

- Site Name
- Site Description
- Latitude/Longitude
- Type of Sensor (surge, wave height, barometric pressure)
- Sensor serial number
- Field crew

- Deployment time

At this time, the CC will assign a Quick Lookup Number to that site, and relay that number to the FRT for inclusion on the field deployment form.

1.2.5 *Pre-Recovery Meeting.*—A pre-recovery meeting will facilitate a more efficient recovery effort. This meeting should occur just prior to recovery at a WSC office or the fall-back location. The meeting is described in more detail in Chapter 5 of this document. The affected WSC(s) will coordinate with the SSC team to perform the recovery of the SSS and housings. Depending upon the post-storm devastation and flooding, the local WSC(s) could be unable to assist with the SSS recovery. If this situation arises, staff from other WSCs or other SSC would be called upon to assist in the recovery.

1.2.6 *Field Recovery*.—Each FRT should call the CC after completion of each recovery, or on an hourly basis, whichever occurs first. When calling in following each recovery, the FRT will relay any information of importance regarding that particular site.

1.2.7 *Post-Recovery Communication*—Most post-recovery communication will involve the retrieval of all field equipment, inspection forms, digital and data files, and other general items. This communication will more than likely occur via phone or email. For larger storms, conference call between multiple parties should be used.

1.3 Safety of FRT Personnel—The safety of the personnel involved with the deployment and recovery efforts are of utmost concern. Procedures have been put in place to ensure timely evacuation and communication of all field personnel.

1.3.1 *Field Response Team.*—An FRT will consist of at least two persons. At least one FRT member must be from a participating SSC, while the other(s) may be from the affected or non-affected WSC(s). The SSC member will be responsible for leading that FRT, while the WSC member(s) are primarily responsible for logistical and operational support. A minimum of two FRT's will participate in all SSS deployments. All personnel are expected to follow all USGS safety procedures and have the appropriate safety equipment, as listed in Appendix D. Ideally, a FRT will be equipped with a crew or extended cab, four-wheel drive utility bed truck with food and extra fuel supplies. Trucks with boat hitches are preferably to accommodate any need for hauling a boat. If a boat is used, extra caution and time must be allowed to account for possible rough seas due to the oncoming storm. Communication via cellular and satellite phones to and from the FRT's are required to ensure safety.

1.3.2 *Communications Center.*—The responsibility of CC is to facilitate communications and logistics with the FRTs throughout the field deployment and recovery period. The CC should have at least one person on duty during these periods. A second person could be called in to assist depending upon

the circumstances. The responsibility of manning a CC would default to the nearest of the three SSC's for each storm response, but the assignment could be changed if circumstances warrant. A CC would be established from employees at one of the SSC's home offices consisting of at least 2 persons and equipment (satellite, cellular, and land-line phones) capable of communicating with personnel from the FRT, affected WSC's, and OSW. The CC will be staffed on a 24-hr basis by the designated SSC while FRT's are involved in the deployment and recovery phases. FRT's will communicate following each deployment or on an hourly basis—whichever comes first—with the communications center (CC) to ensure group safety and logistical coordination. If the CC has had no communication with a FRT within an hour, the CC will attempt to contact the FRT directly or through another FRT. If not successful, the CC will direct another nearby FRT to physically locate the missing FRT. If all else fails, the CC will contact local law authorities to notify them of missing personnel. The CC will also maintain contact with the NWS Storm Coordination Meteorologist to obtain and rely upon the up-to-date information on wind strength and rain cells.

Comment [SB1]: I don't understand why the SSC has to run the CC and a WSC couldn't do it. I think local knowledge will be very important to helping the field crews. I certainly agree with the observation about local knowledge, but I am concerned about staffing a CC, on which a great deal depends, in the middle of an area that could lose communications or power. I will discuss this with the WSCs and see what they think. My guess is that this call will be made on a case by case basis or that we will have a backup for the CC elsewhere.

1.3.3 *12-Hour Deadline.*—Regardless of the situation or the deployment progress, all FRT's will cease deployment activities and begin moving to safety no less than 12 hours prior to the time of predicted hurricane landfall. The predicted time of hurricane landfall will be communicated to the FRT's by the CC as estimates from NOAA are issued or revised. While moving to safety, the FRT's will continue hourly communications with the CC to ensure group safety. Communications between the FRT's and the CC may stop if:

- A FRT has returned to the SSC, or
- A FRT has secured lodging in a safe fall-back location.

1.4 Contact with Non-USGS Persons in the Field—Any contacts with the media should be referred to the affected WSC Director or appropriate proxy. All other contacts with non-USGS persons (EMAs, law enforcement, or general public) should be handled by the FRT leader. All contacts with Non-USGS persons should be noted on the inspection forms by the SRT.

CHAPTER 2: STORM-SURGE SENSOR NETWORK DESIGN

Proper selection of deployment sites in relation to the projected path of the hurricane is essential to the successful collection of storm surge data. Within the context of general conceptual design of the SSS project, there are several specific considerations that must be considered.

2.1 General Design Concept of a SSS Network—The general conceptual design of the SSS network is to establish a blend of pre-determined and "opportunistic" monitoring sites from which we can adequately determine the spatial distribution and timing of a hurricane-induced surge and its interaction with coastal features. A single line or row of SSS deployed along the coast will

not supply this information. An additional design consideration, is the potential to use clusters of SSSs to obtain detailed data about the interaction of surge on local features of interests such as population centers and built infrastructure (levees, floodwalls, roads, bridges, channels, ports, and buildings) or natural environments (reefs, beaches, wetlands, wildlife refuges and reserves, streams and estuaries.) Most SSS networks would consist of pre-determined or opportunistic sites that complement the existing network coastal streamgages and tide-monitoring sites and provide flexibility to alter plans as forecasts change.

2.1.1 *Pre-determined sites.*—Pre-determined sites are potential locations identified by analysis of maps and other data, but for which a specific mounting object, pier, or pole has not been assigned. Use of pre-determined sites provides a general indication of where SSS should be targeted, but relies on the FRT to identify the specific location for the SSS. At a minimum, a WSC should establish and maintain a database and map of pre-determined sites and nearby survey benchmark locations. The SSCs can advise and assist with this effort.

2.1.2 *Opportunistic sites.*—Opportunistic sites are determined "on-the-fly" by the FRTs. The advantage of this approach is a much lower cost to establish the network and increased flexibility in deployment as the projected path of the storm changes. The disadvantages are the significant cost and time involved to establish elevations to previously un-surveyed points. It also requires more coordination and tracking in the field as the stations are created and deployed to ensure adequate spacing of instrumentation.

Over time, as more SSS deployments are accomplished and documented and site information are archived, the network will evolve from a purely opportunistic design to one more closer to a pre-determined design. This evolution is dependent upon the value placed by stakeholders upon the data and products generated from this project.

The ideal design is one that mimics a "grid" of stations, traversing both along the length of the coastline as well as inland along waterways and over land. This deployment design would allow for the development of a four-dimensional (x, y, z, and time) data layer of the surge.

2.2 Site Selection Factors—There are a number of factors that must be considered in the selection of sites. Such factors as sensor location in the water column, expected surge height, variability in projected hurricane paths, datum control, barrier islands, accessibility, proximity to population centers, quality assurance, local WSC data needs, and inclusion of existing real-time USGS stations are all important in designing and implementing a SSS network.

2.2.1 *Sensor Location in the Water Column.*—For sensors deployed in water, the goal is to record as much of the entire tidal cycle as possible, in order to be able to distinguish the surge from the normal tidal range. Thus, the SSS should be placed as low as possible in the water column, and, the deployment,

if possible, should be conducted during low tide. But this situation poses a potential problem for recovery of the units; if a SSS is deployed at a low elevation during low tide, the SSS might be difficult to access during high tide. This situation usually requires the cutting of the ratchet strap or returning to the site at low tide.

As experience from Ernesto in 2006 showed, the fluctuation of the tidal cycle on the Atlantic Coast can be anywhere from 8-10 feet, and depending upon the landfall location and timing, it could mean a considerable difference in the inland extent of the surge. Along the Gulf Coast, the tidal range is usually between 1-3 feet making the extent of the flood dependant more nearly on surge alone.

For sites that are deployed over land, the SSS should be deployed as close to the ground level as possible, without impeding the flow of water into the housing, to capture as much of the storm hydrograph as possible.

2.2.2 *Expected Surge Height.*—The projected surge height and coastal topography determines how far inland SSSs should be deployed. For example, along the Grand Strand in South Carolina, the topography is steep and limits the potential inland progression of surge, whereas the coastal marshes of Louisiana are low and flat, thus surge waters may penetrate far inland, requiring that SSS be deployed further inland.

Inland distribution of sensors provides not only the depth of water at the inland locations, but permits determination of the travel time of the surge and the average slope of the surge surface which is partly a function of roughness, and a crucial variable for surge modeling. To permit these determinations, some SSSs should be deployed in a transverse pattern inland from the beaches.

The National Hurricane Center (NHC) has developed “surge potential” maps. These maps along with topographic maps should be used to determine the potential extent inland of hurricane surge for various hurricane categories and the extent of the SSS network. The SSCs have access to forecasted surge information from the NHC and NOAA SLOSH models. The deployment plan should consider the effect of man-made barriers, such as highway embankments and levees.

The pre-deployment plan should identify sites that should be deployed at various levels of hurricanes. For example, in Georgia, for a Category 3 landfall, the I-95 embankment provides delineation for the extent of the deployment. For a higher category storm, the natural topography further inland would then define the limits of deployment.

2.2.3 *Variability in Projected Storm Paths*.—The natural variability associated with the forecasted storm paths from the NHC poses one of the greatest challenges for this project and requires a great deal of flexibility in

deployment options. The ideal deployment would have the majority (3/4) of the site locations falling in the northeast quadrant of the hurricane, where the greatest surge usually occurs. Because hurricane prediction is still not precise, the deployment plan should be conservative in keeping to the right side of the NHC projection cone. The problem occurs when the path is continually being revised. There are some storms where the projected path is fairly reliable over the days preceding landfall, especially within the Gulf Coast. However, especially along the Atlantic Coast, a small change in the projected path can mean having the SSS deployed in the wrong state. A rule-of-thumb is that most revisions to the hurricane paths usually move the path further to the east, and deployment should be biased in that direction.

Hurricane Ernesto in August 2006 is a perfect example of the path variation impact on deployment. The original 5-day projection showed a landfall along the Louisiana-Texas coastline. Plans were made to mobilize in that direction. Over the next 48 hours, the path migrated to the east, eventually showing a landfall in the Miami area. FRT crews from Ruston were then routed towards the Florida Gulf Coast. As the storm progressed, the path was again revised and the strength downgraded to a tropical storm, thus eliminating the deployment need in Florida. However, the projected path called for the storm to re-emerge in the Atlantic and gain strength and head for the South Carolina coast. The Atlanta SSC crews paired with the South Carolina WSC to deploy sensors along the South Carolina Coast. This projected path stayed true until just hours before landfall, where the storm veered slightly to the east, causing landfall in North Carolina.

2.2.4 *Datum Control.*—Where possible, locate sites near benchmarks or other elevation controls. On a map identify and highlight benchmarks (BMs) or other elevation controls to which the SSS survey crews may have access. Start with and emphasize National Geodetic Survey (NGS) BMs. Don't overlook U.S. Army Corps of Engineers (Corps) BMs, or those of State or local departments of transportation. For future use create a spread sheet containing the site number, latitude, longitude, elevation, and contact information or web URL. These data will be crucial during post-storm surveying.

2.2.5 *Barrier Islands.*—Along many coastlines, there are barrier islands which not only protect the mainland, but are also prevalent to considerable development, usually high-end beach homes and condominiums. The sustainability of the structure of these islands during hurricane events is of considerable interest for wave research, shoreline protection, wildlife habitat, and coastal business communities. Placement of these sensors both laterally and inland across the dunes and back-bays of the barrier islands should be considered either in limited deployments or larger deployments depending upon the importance of the barrier islands and availability of staff and sensors.

2.2.6 Accessibility.—Foresight must be used to determine the potential accessibility problems both during deployment and recovery efforts. For

example, deployment to a barrier island by boat will require additional time. Other examples would include bridge closures, secure compounds, and National Park facilities that could be closed in advance of the storm. In this instance, these types of sites should be identified beforehand to prioritize them as first-deploy sites in order to ensure evacuation before landfall.

In general, deployment should follow along major highways and roads. The use of bridge pilings at waterways should be a primary focus. Utility poles, trees, and other structures immediately off these major roads should be used for overland SSS locations.

Accessibility considerations also include obtaining permission to deploy a sensor from the landowner. Beach piers and other high visibility properties may provide good SSS sites, but permission to attach a SSS to a pier should be obtained before doing so. Bridge piers, utility poles, and the like are usually acceptable to deploy without permission.

Keep in mind that evacuation efforts concurrent with deployment can be both a problem and opportunity. Experience with Rita and Wilma deployments was that outbound traffic concentrated on major roads but inward lanes were generally open and clear. After the SSSs were deployed, outward bound roads were clear and crews could make their way home unimpeded.

2.2.7 *Proximity to Population Centers.*—Emergency management agencies are most interested in the surge that occurs near coastal population centers—both from a public safety and a flood documentation of damage prospective.

2.2.8 *Proximity to Existing Real-Time Gages.*—To expand the areal coverage of data points, the locations of the existing real-time gages should be incorporated into the overall deployment design.

2.2.9 *Quality-Assurance of SSS.*—To provide adequate quality-assurance of the data collected by the SSS, at least 5-10% percent of the deployment sites should be considered quality-assurance sites. This could be accomplished by the deployment of a second set of SSS at the same location or the deployment of SSS at a real-time station.

2.2.10 *Location of Barometric Pressure Sensors.*—A subset of the SSS deployed must be used to record the barometric pressure of the atmosphere to correct the non-vented pressure data from the water level SSS. The location of these sensors ideally would be a one-to-one deployment, but due to the limited number of SSS available, a method of grouping the water level sensors to a particular barometric pressure sensor must be undertaken. A general rule-of-thumb would be to include all water level sensors within a ten-mile radius of the deployed barometric pressure sensor. It is critical to ensure that the barometric pressure sensors are adequately spaced along the coast to capture the variations as the storm comes onshore. It is especially important, if possible, to have a tighter cluster of these sensors near where the eye of the

storm is expected to make landfall, since that is where the largest gradient of barometric pressure would occur.

2.2.11 *Local WSC Data Needs*.—Various cooperating agencies have special needs and interest in surge data. The SSS project welcomes opportunities to acquire such data when the work is consistent with project objectives and WSCs should be mindful of collaborative and program development opportunities that provision of surge data might permit. For example, surge data would greatly aid assessment of ecological damage and development of models for ecological damage and recovery. Departments of transportation, the Corps of Engineers, the National Park Service, and other agencies would value the data in the context of their projects and research efforts. Often unique datasets could be obtained by WSC or cooperator deployment of other environmental sensors (such as for salinity, wind, etc.) or water-quality sampling. Care must be given to the compatibility of the sensors and the data from each type. It would be best to deploy similar sensors as both the water-level and barometric-pressure sensors so that software compatibility issues do not arise.

CHAPTER 3: SENSORS AND HOUSINGS

Note: Inclusion of vendor information does not represent an endorsement by the USGS but is for informational purposes only.

There are two primary sensors that have been used to date for SSS deployments. Each has merits relative to the intent of the deployment, whether it is storm surge or wave-height.

3.1 Sensor types.—The SSS effort is currently using the Onset HOBO sensor. Certain WSCs have explored using the In-Situ TROLL sensor. Ongoing testing and development of other brands and models of sensors will surely continue as new applications for this technology increase.

3.1.1 *Onset HOBO pressure sensors*.—Onset Computer Corporation is the vendor that produces the HOBO U-20-001-01 Water Level Logger. This sensor is a non-vented pressure sensor and datalogger. It has a 0-30 foot range and uses an optic USB base station to communicate from a computer/laptop to the sensor. The internal battery must be changed by returning the sensor to the vendor.

The sensors are programmed using proprietary software from Onset that operates in a Windows environment.

Storage for sensors during storage and transportation is best in a Pelican hard-plastic carrying case with pick-apart foam inside. A large enough carrying case should be obtained which can hold 20 HOBO sensors, plus one USB

Base Station per case. More information regarding these sensors can be found at:

http://www.onsetcomp.com/index.html

3.1.2 *In-Situ TROLL pressure sensors.*—The Level TROLL 300 is a non-vented pressure sensor and datalogger manufactured by In-Situ, Incorporated. The TROLL has a range of 0-35.8 feet and uses multiple communication protocols, including SDI-12, for communication with other sensors and computers.

The sensors are programmed using proprietary software from In-Situ that operates in a Windows environment.

Storage for sensors requires a deeper carrying case, since the TROLL is longer than the HOBO, but the other dimensions should be suitable for carrying 20 units at a time. More information regarding these sensors can be found at:

http://www.in-situ.com/default.html

3.2 Sensor Programming.—Both types of sensors require Windows-based proprietary software for programming the sensors. Specific guidance for programming these sensors include:

Data Interval: 30 seconds

Sensor Time: UCT (note: laptop(s) must be set to UCT and times synchronized to ensure uniform logging start times)

Sensor Logging Delay Time: Depends upon deployment schedule, but helps to have tidal data before the surge occurs.

Once a configuration is created, it can be saved and downloaded into multiple sensors, which speeds up the preparation for deployment.

3.3 Housing Design.—The sensor housing design used for the 2005 and 2006 hurricane seasons were created by the Ruston SSC team prior to the Rita (2005) deployment. This housing design, somewhat following the design of a crest-stage gage, allows for quick attachment to a piling, utility pole, or other vertical structure through the use of a nylon ratchet strap. It is anticipated that this housing design will undergo a few minor design changes incorporating lessons learned from the 2006 Ernesto deployment. With these small design changes, it is anticipated that the housing design will be adopted by the SSCs for long-term use.

The five major parts of the housing include the housing pipe, the housing cap, the sensor eye bolt, the ratchet strap, and the USGS Visual Identity sticker. Figure 1 below shows a schematic of the housing.

3.3.1 *Housing Pipe.*—The housing pipe is a galvanized 1.25-inch diameter steel pipe that is 10-inches long. On the top end, the pipe is threaded to hold a cap. The bottom end is open to allow for water to enter. A 2-inch by 8-inch piece of steel angle is welded to the side of the pipe, and has a 2-inch by 1-inch piece of steel channel iron on it through which the ratchet strap is threaded. This steel angle permits the easy deployment on a circular or rectangular vertical structure, such as a tree, piling, or utility pole.

3.3.2 *Housing Cap.*—The housing cap has a 1.25-inch diameter, and is also made of galvanized steel. The cap has a hole drilled in the center to hold the sensor eye bolt. A second hole is drilled to the side of the eye bolt hole to allow venting of air as water enters the bottom of the housing pipe.

3.3.3 *Sensor Eye Bolt.*—The sensor eye bolt is a steel eye bolt that is attached to the housing cap from the bottom, so the eye bolt would be inside the housing pipe when the cap is screwed onto the pipe. A D-link or plastic tie strap is used to attach the sensor to the eye bolt. The nut of the eyebolt on the top of the housing cap becomes the housing reference point (RP) for the housing and sensor. ***It is critical to measure the "housing correction factor", which is the distance from the top of the nut on the housing cap to the sensor membrane, which is about 1/8th-inch above the orifice hole in the sensor.*** This housing correction factor should be entered on the deployment form. It relates the sensor membrane to the housing reference point—and eventually to the station reference point—to establish the datum of the station data.

3.3.4 *Ratchet Strap.*—The ratchet strap is a commercially-bought 2-inch wide nylon strap that loops around a vertical pole, piling, or tree, feeds through the channel iron loop on the housing and into a metal ratchet mechanism. This ratchet mechanism cinches the housing tightly to whatever it is being mounted against. *Note: In areas where there is strong surf, it can be difficult to cinch the housing to a pier piling. Please use caution.*

3.3.5 *USGS Visual Identity sticker.*—The USGS Visual Identity sticker is a critical part of the housing. This sticker identifies what the housing is, who owns it, and a contact number to call in case of questions. At the time of the writing of this document, a sticker design is being worked on.

3.3.6 *Construction of the SSS Housing.*—If desired, the instructions for building a SSS housing can be found in Appendix E. Otherwise, the Georgia WSC has previously contracted with the Tifton Machine Works in Tifton, Georgia to construct quantities of housings for about $22 each. This included a yellow powder protective coating that inhibits rusting. For more information, please contact the USGS Tifton Field Office chief at (229) 382-6353.

Storm Surge Transducer Deployment Housing v2.0

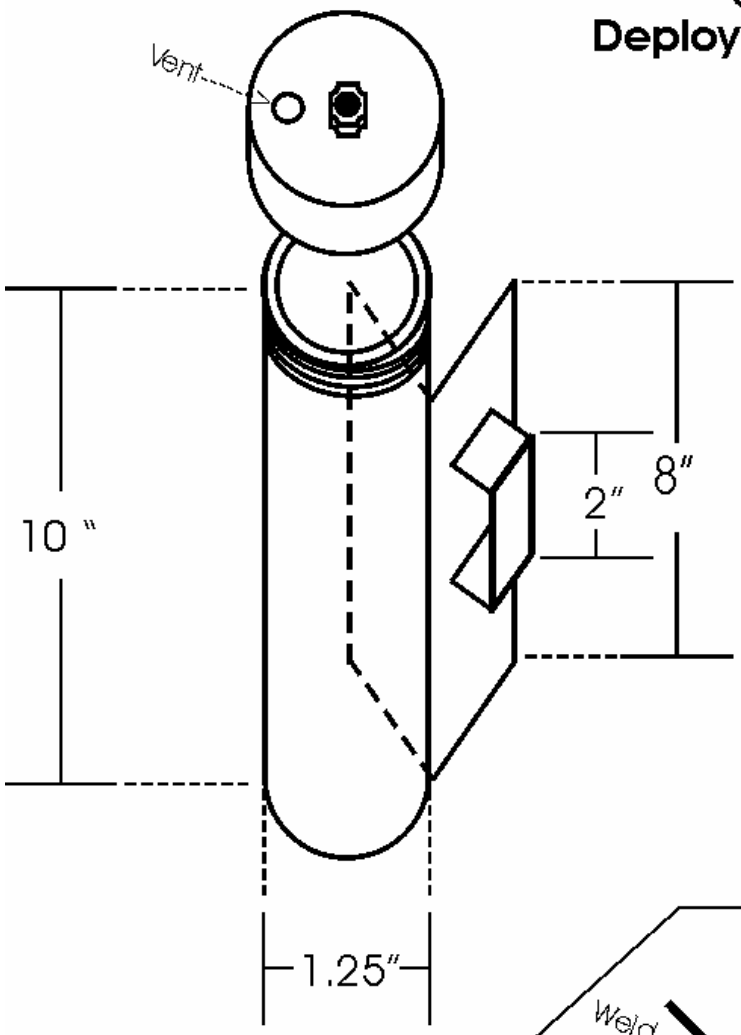

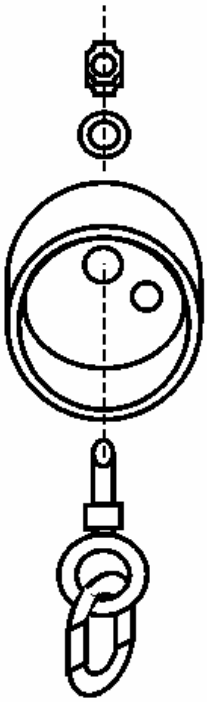

Cap Diagram

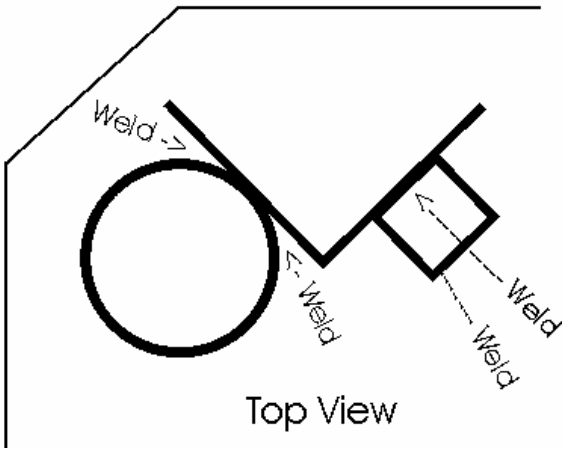

Top View

Materials List:
1.25 in. Steel pipe (10 in. Long)
1.25 in. Threaded cap
2.0 in. Angle iron (8 in. Long)
2.0 in channel iron (1.0 in. Wide)
2.0 in. X 3.8 in. Eye bolt w/ nut (2) and lock washer
3/16 in. X 1.5 in. D-ring

Figure 1. SSS Housing schematic.

CHAPTER 4: PRE-DEPLOYMENT MEETING

The pre-deployment meeting is a vital step to help bring WSC employees up to speed with the plans and techniques of the SSS project. This meeting should take place at a central location in the vicinity of the planned deployment area. It could be held at a USGS office or a conference room at a hotel. The pre-deployment meeting space is arranged by the local WSC. The meeting room should have enough space to accommodate all persons involved and to prepare the equipment and instrumentation. A dry erase or chalkboard, along with Internet and phone capabilities, is helpful.

Once OSW determines to respond to a storm threat, the SSC team leaders and any WSC personnel should mobilize to the pre-deployment meeting location. Included in this is the approval of a tentative travel authorization for each employee, as necessary. Deployment of the SSSs will begin no later than 24 hours prior to the predicted hurricane landfall with subsequent evacuation no later than 12 hours prior to landfall. With increased preparedness and planning, deployments will hopefully begin sooner depending upon the variability of the predicted hurricane storm track and the status of the FRTs. Keep in mind that there will be some storms that will vary in strength and path, and plans can change while traveling.

A number of things will be covered in the pre-deployment meeting, including:

1. A tally of all available sensors and equipment will be made to determine the number and types of sites to deploy to.

2. The WSC and FRT leaders will finalize the site list, ensuring that the factors discussed in Section 2.2 are covered.

3. Once the sites are identified, they will be grouped into trips according to the available personnel. The trips are assigned to the FRT leader and a second person. Each FRT leader should document their site responsibility, and plan the most efficient route to complete the deployments assigned. This would also include prioritizing certain sites due to accessibility issues. A listing of the proposed trips, in probable order of visit, should be compiled for the CC in the case a search party is required to find a missing FRT. Preliminary site names and descriptions could be assigned at this time, and verified during the call-in following deployment (see Appendix G).

4. Contact information for all personnel involved will be shared with everyone, including the schedule for persons assigned to the CC.

5. All SSSs will be pre-programmed according to the programming criteria in Section 3.2.

6. Each FRT will be assigned the proper number of SSSs, housings, and necessary equipment to be used in the deployment process. Blank deployment forms should be handed out.

7. A final check of all equipment will be done, and vehicles loaded for deployment. All general equipment should be carried in a large dry box for ease of transportation and organization. These dry boxes are provided by the SSCs.

8. The evacuation time from the deployment area and fall-back location during the landfall will be determined, and the local WSC should arrange for hotel accommodations.

CHAPTER 5: SENSOR DEPLOYMENT PROCEDURES

The sensor deployment process is the most critical step in the entire SSS effort. It requires organization and communication to manage multiple field crews for optimal results, attention to details in documenting exact locations and procedures, and flexibility to change the process at a moment's notice.

Following the pre-deployment meeting, the FRTs will travel to the first site location and be ready to begin deployments as soon as feasible. Be aware that some details may be communicated to the FRTs en route. A general description of the SSS deployment procedure follows in Section 5.1.

5.1 General Deployment Procedures.—The following is a generalized list of deployment procedures. More detailed information for certain items in the list follows in subsequent sections.

1. The FRT travels to the deployment site, using Gazetteers, maps, and Global Positioning System (GPS) units. This may require coordination with multiple vehicles, boats, or other access concerns (see Section 5.2)

2. Implement all necessary safety signage, vehicular flashing lights, and reflective vests/clothing and Personal Floatation Devices (PFDs).

3. Evaluate the site for suitable placement of SSS. A suitable deployment structure should be one that will be inundated with storm surge, but remain after the event. Also, take advantage of situations to maximize data collection (i.e. low tide).

4. Record all initial site information on the SSS Deployment Form (see Section 5.3)

5. Insert the pre-programmed SSS into the housing and secure. If required, prepare the co-located barometric-pressure sensor (BPS).

6. Establish a site RP on a bridge handrail or other appropriate location. Make a tapedown to the water surface (see Section 5.4).

7. Attach the sensor housing(s) to the appropriate structure using the ratchet straps.

8. Hammer a nail into wooden pole or piling equal with the top of the housing nut to use as a reference for any slippage of housing unit during storm event. On a concrete piling, use a chiseled mark.

9. Measure the housing nut relative to water and ground surface (see section 5.5)

10. Document placement of sensor(s) at site using sketches on SSS Deployment Form and digital camera (see Section 5.6)

11. Finalize SSS Deployment Form notes and contact CC (see Section 5.7)

12. Collect all tools, equipment, and safety signage and reload vehicle for travel to next site.

13. If last site is complete, evacuate to fall-back location (see Section 5.8).

5.2 Use of GPS Units for Deployment.—The GPS technology allows for quick determination of the precise location of a deployment site as well as document the travel path of each FRT. Most hand-held GPS units have software that allows for connection to laptops and computers to easily transfer waypoints and travel paths.

The location of each deployment station should be read and recorded in decimal degrees (to 6 places).

The travel path option should be activated upon departure from the pre-deployment location. This tool records a waypoint automatically as you travel to and between sites. These waypoints can be saved as a trip, and exported to a computer for display on a map. This map can be printed out or emailed, if necessary. The GPS unit and saved trip path can then be used to navigate back to each site during the recovery process.

5.3 Deployment Inspection Form.—The SSS Deployment Inspection Form is located in Appendix F of this document. The layout is designed to follow the generalized deployment procedures in Section 5.1. Several key items to note:

- One form per housing deployment, so if a barometric pressure sensor is deployed concurrently, please fill out a separate Deployment Inspection Form.
- In the upper right corner is a box that has a space called the “Quick Lookup #”. This quick lookup number will be assigned by the CC member upon call-in. It is used to tie the inspection form to the site information spreadsheet (see Section 6.1).
- Follow the format for the SITE NAME shown below the entry line.
- The LATITUDE and LONGITUDE should be in decimal degrees.
- The DEPLOYMENT and DEPARTURE times should be in Universal Coordinated Time (UCT) to eliminate confusion with time zones and daylight savings.

- The dark shaded box refers to a tape-up or tape-down from the housing nut (see Section 5.5)
- The vertical shaded box refers to the "Housing Correction Factor" discussed in Section 3.3.3.

5.4 Establishment of Reference Points.—The proper establishment of a station reference point (RP) will expedite the deployment, recovery, and eventual surveying if required. The RP should follow standard USGS guidelines used for streamgages. The key is easy access for making tapedowns to the water surface as well as eventually running conventional or GPS levels to the RP. An ideal location would be a chiseled mark on the side of a bridge handrail. RP locations below the road surface are difficult to survey and pose accessibility problems. The RP location should be documented on the SSS Deployment Inspection Form, both in text on the lines provided and in the site sketch area. It would also be helpful to paint with bright colored paint the location of the RP and document with a digital image. Effort should be taken to minimize the look of graffiti with the spray paint, especially in public areas and privately-owned facilities.

5.5 Determination of Temporary Sensor Elevation.—The SSS Deployment Inspection Form provides space to calculate the sensor elevation based on an assumed RP elevation. If an accurate elevation is known, substitute in place of an assumed elevation. The first step is to assume an RP elevation—20.00 feet is a good number to use. Then, subtract the tapedown, including the weight length, from the RP elevation to get the assumed water-surface elevation. From this, either add or subtract the distance from the housing nut to the water surface, and then subtract the housing correction factor. This should then give you an elevation of the sensor orifice relative to the assumed RP elevation.

It is also necessary to tapedown from the housing nut to the ground elevation. This can be used to quickly determine the depth of water that occurred during the storm. It can also help determine any change in beach elevation due to erosion or aggregation of sand. Space is provided on the SSS Deployment Inspection Form for this measurement.

5.5 Digital Photographs.—Each FRT should be equipped with a digital camera to record the site conditions before and after the storm event. Each brand of camera is different in how it stores each image file, so it is important to record the "owner" of each camera on the bottom of the inspection form. Also on the form are places to circle as to what types of images were taken. It would be helpful if the ability to display the date in the digital image was activated.

The first image at each site during deployment should be a snapshot of a dry erase board that displays the site name, date, and type of sensor. An example of this is shown in Figure 2. Each team should be equipped with a small dry erase board and several dry erase markers. The next images should be of the housing in its deployment location. The next images should be of the upstream and downstream conditions. The next images should be of the RP location. Finally, if a barometric

pressure sensor is deployed, a close-up of the location of the sensor, plus a larger view of it relative to the surge sensor is helpful.

Figure 2. Example Of Site Identification Using Digital Photos

Images of USGS personnel in action, and even short videos created with the digital cameras can be helpful for eventual press releases and other public-relations documents.

When the digital images are downloaded to a computer and subsequently to a central file location, they should be weeded out for poor-quality images and the remaining ones renamed according to the file name nomenclature of:

SSS-ST-COU-###-P#.jpg

where:

SSS	represents “Storm Surge Sensor” project
ST	represents the State where deployed
COU	represents the County where deployed
###	represents the site number assigned by the FRT
P#	represents the numerical order of each image

Note: the site number is not a USGS downstream order number, but a three-digit number assigned by the FRT. Each FRT should have a range of numbers assigned to them at the pre-deployment meeting for all of their sites. It is helpful to assign these numbers in increments of fives.

5.6 Call-In Procedures.—The call-in procedure is a critical tool for organizing the station data as well as track the progress and safety of each FRT. Following the completion of each site deployment, the FRT should call into the CC to check in and provide the following information:

- Site Name
- Site Description
- Latitude/Longitude
- Type of Sensor (surge or barometric pressure)
- Sensor serial number
- Field crew
- Deployment time

This information is entered into the Site Summary Spreadsheet by the CC which is used to track all site deployment information and inspection forms.

If more than an hour passes between SSS deployments, the FRT should call into the CC to check in for safety purposes. If the CC does not hear from the FRT within that hour, the CC team should call the FRT either on their cell phones or satellite phones. If persistent contact attempts fail, other FRT teams in the area should be contacted to attempt to locate the missing FRT, starting with their last known call-in location. These frequent call-in procedures should continue until all FRTs have reached the fall-back location.

During the call, any change of deployment plans based upon changes of projected storm path should be communicated to each FRT.

5.7 Evacuation of Landfall Area.—All FRT personnel should evacuate the deployment area NO LATER THAN 12 hours prior to landfall. This evacuation time should be established during the pre-deployment meeting based upon forecasted hurricane paths. In general, this evacuation time should remain firm, even with minor fluctuations of forecasted path simply for the safety of the personnel. Each FRT should evacuate to the location determined during the pre-deployment location.

CHAPTER 6: LANDFALL STAND-BY PROCEDURES

During the time that landfall is occurring, the FRT personnel first priority is to get well rested from the long day(s) of the deployment process. After a reasonable amount of time is provided for rest, if time permits, there are a few housekeeping items that can be accomplished to speed up the data availability after the storm. Such items as verifying the accuracy of the Site Summary Spreadsheet, creation of site maps, collection and copying of all SSS Deployment Inspection Forms, and the collection of all digital images

and GPS information can be accomplished during this period. A FRT leader should be assigned at least one of each of the following tasks to ensure completion. If time is not available for this during the landfall period, it will have to be performed during the data management and processing period after the storm. Because of the urgency to disseminate the data as quickly as possible, it is recommended to attempt to accomplish these tasks during the landfall period. Of most importance to complete is the pre-recovery planning meeting, which is discussed in Chapter 7.

6.1 Verification of Site Summary Spreadsheet.—The call-ins from each of the FRTs during the deployment process helped populate a Site Summary Spreadsheet. An example of this spreadsheet is in Appendix G. This spreadsheet becomes the primary means to organize all information collected during the SSS response, and can be a tool to help communicate results to local officials and other scientists.

Because of the importance of this spreadsheet, a FRT leader should be designated so that all information is verified with the SSS Deployment Inspection Forms collected from the FRTs. A red check mark on the Inspection Form denotes that the information has been checked against the spreadsheet.

6.2 Creation of Site Maps.—All laptops used for the SSS deployment should have both Google Earth and Adobe Acrobat Professional on the hard disk. An FRT leader should be designated to create the site map files. This can be done by entering the latitude and longitude of each site (from the Site Summary Spreadsheet) into Google Earth and it will provide a zoomed in satellite image of the site location. The image can be zoomed in or out to provide a more appropriate view of the location relative to the coast line.

Once zoomed in to the proper level, Google Earth creates a “temporary” location. You can edit the attributes of this temporary location by editing the name, icon type, icon color, etc. Assign the name according to the Site Name from the SSS Inspection Form. Choose the option to save to “My Locations” to save this location on the hard disk.
To create a PDF file of this map, choose the print option, and select the Adobe PDF as the printer. A box will appear to prompt the user the location and file name of the PDF file. Use the following file naming nomenclature:

SSS-ST-COU-###.pdf

where:	SSS	represents “Storm Surge Sensor” project
	ST	represents the State where deployed
	COU	represents the County where deployed
	###	represents the site number assigned by the FRT

NOTE: The .pdf file extension differentiates this file from all other station files.

6.3 Collection and Copying of All Deployment Inspection Forms.—A FRT leader should be designated to collect and copy all SSS Deployment Inspection Forms from each FRT. Copies of all forms should be made at the USGS office, hotel lobby, or other appropriate copy facility. The copies are handed out to the recovery FRTs. The originals stay with the designated FRT leader.

6.4 Collection and Processing of Digital Images and GPS Information.—A FRT leader should be designated to download all digital images from the various cameras used during the deployment process. The designated FRT leader should process each image file by weeding out images of poor quality and renaming the files according to the file naming nomenclature outlined in Section 5.5.

Additionally, this person should download travel paths from the handheld GPS units to plot on maps and create digital files.

CHAPTER 7: PRE-RECOVERY MEETING

Like the Pre-Deployment Meeting, a meeting to lay out the plans for the initial sensor recovery effort is highly recommended. The time required for this meeting should be much less than the Pre-Deployment Meeting, but depends upon the severity of the hurricane landfall. Keep in mind that the personnel that participate in the recovery effort, especially from the WSC, might not be the same that participated in the deployment effort, and some education as to the process involved may be necessary. It is assumed here that the surveying of the site datums is a separate effort (see Section 9.5) and crews from other WSCs will be called in to assist with this effort.

A number of things will be covered in the pre-deployment meeting, including:

1. Recovery trips will be assigned to the FRT leader and the second person. Each FRT leader should document their site responsibility, and plan the most efficient route to complete the deployments assigned. This also includes prioritizing certain sites due to accessibility issues.

2. Accessibility approvals from State Police and other authorities should be arranged prior to departure.

3. Contact information for all personnel involved should be shared with everyone, including the schedule for persons assigned to the CC.

4. Copies of the SSS Recovery Inspection Form should be handed out to all FRTs. These forms should be on a different colored paper than the deployment forms.

5. A final check of all equipment should be done, and vehicles loaded for recovery. All general equipment should be carried in a large dry box for ease of transportation and organization. These dry boxes are provided by the SSCs. Additional equipment such as chain saws, gas cans, generators, bottled water, and

non-perishable food items should be included depending upon severity of damage in the landfall area.

6. The post-recovery location (either a nearby hotel or home office) should be determined, and the local WSC should arrange for hotel accommodations, if necessary.

CHAPTER 8: SENSOR RECOVERY PROCEDURES

The recovery process generally is the same as the deployment, but is relatively short due to the fewer number of tasks involved. It again requires organization and communication to manage multiple field crews for optimal results, attention to details in documenting exact locations and procedures, and flexibility to change the process at a moments notice.

Following the pre-recovery meeting, the FRTs should travel to the first site location and be ready to begin recovery as soon as feasible. Be aware that some details may be communicated to the FRTs en route. In some instances, it may be beneficial to run the trip in reverse due to accessibility issues. Also, some sites may not be accessible at all and have to be visited again at a later time. A general description of the SSS recovery procedure follows in Section 8.1. Discussion of the surveying of the site datum is in Section 8.8. This effort can be either combined in the SSS recovery effort, or performed as a separate effort at a later time.

8.1 General Recovery Procedures.—The following is a generalized list of recovery procedures. More detailed information for certain items in the list follows in subsequent sections.

1. The FRT travels to the site, using Gazetteers, maps, and Global Positioning System (GPS) units. This may require coordination with multiple vehicles, boats, or other access concerns (see Section 8.2).

2. Implement all necessary safety signage, vehicular flashing lights, and reflective vests/clothing and PFDs.

3. Record all site information on the SSS Recovery Inspection Form provided in Appendix H (see Section 8.3). Verify latitude and longitude with handheld GPS unit.

4. Evaluate the condition of the housing, vent holes, and ratchet straps. Document on SSS Recovery Inspection Form. Take a digital image of the SSS.

5. Verify that the sensor housing has not slipped from original deployment spot. Note on SSS Recovery Inspection Form. If it has slipped, measure the distance from the top of the nail to the top of the nut, and document on SSS Recovery Inspection Form.

6. Measure the housing nut relative to water and ground surface (see section 8.4)

7. Perform a tapedown from the site RP to the water surface.

8. Remove the sensor housing(s) from the structure by releasing or cutting the ratchet straps.

9. Remove the SSS from the housing and store in large sealable plastic bag. Mark the site name and date of recovery on the outside of the bag with a marker.

10. Store deployed housing in location that will not be damaged by mud, salt water, or other water-borne contaminants.

11. Document any nearby high-water marks on SSS Recovery Inspection Form and flag with USGS markers and colored flagging tape. Take digital images if possible. Measure the distance of the high-water mark from a clearly defined location(s).

12. Establish a minimum of three Reference Marks (RM) at each site using nails, chiseled squares, or lag bolts, as the conditions require. Label established RM's on site with paint so that survey crews may identify and reference the appropriate RM's at a later time, if necessary.

13. Document any hurricane-altered conditions at site using sketches on SSS Recovery Inspection Form and digital camera (see Section 8.5).

14. Finalize SSS Recovery Inspection Form notes and contact CC (see Section 8.6)

15. Collect all tools, equipment, and safety signage and reload vehicle for travel to next site.

16. If last site is complete, coordinate for trip to home office (see Section 8.7).

8.2 Use of GPS Units for Recovery.—Verify the location of each deployment station using the hand-held GPS unit to the nearest degrees, minutes, and seconds. The decimal units of the seconds reading should be rounded to the closest second.

The travel path option should be activated upon departure from the fall-back location. The GPS unit and saved trip path can then be used to navigate back to each site during the recovery process. The GPS unit notifies the user of which direction to turn and how far to go until the next turn or site location.

8.3 Recovery Inspection Form.—The SSS Recovery Inspection Form is located in Appendix H of this document. The layout is designed to follow the generalized recovery procedures in Section 8.1. Several key items to note:

- One form per housing recovery, so if a barometric pressure sensor is deployed concurrently, please fill out a separate Recovery Inspection Form.

- In the upper right corner is a box that has a space called the "Quick Lookup #". This quick lookup number is the same one assigned by the CC member during deployment. It is used to tie the inspection form to the site information spreadsheet (see Section 6.1).
- Follow the format for the SITE NAME shown below the entry line.
- The LATITUDE and LONGITUDE should be in decimal degrees.
- The RECOVERY and DEPARTURE times should be in Universal Coordinated Time (UCT) to eliminate confusion with time zones and daylight savings.
- The dark shaded box refers to a tape-up or tape-down from the housing nut (see Section 5.5)
- The vertical shaded box refers to the "Housing Correction Factor" discussed in Section 3.3.3.
- The Slippage Correction Factor is the distance the housing slipped during the storm event, measured from the top of the nail or chiseled mark to the top of the housing nut.

8.4 Determination of Temporary Sensor Elevation.—The SSS Recovery Inspection Forms provide space to calculate the sensor elevation based on an assumed RP elevation. If an accurate elevation is known, substitute in place of an assumed elevation. The first step is to assume an RP elevation—20.00 feet is a good number to use. Then, subtract the tapedown, including the weight length, from the RP elevation to get the assumed water surface elevation. From this, either add or subtract the distance from the housing nut to the water surface, and then subtract the housing correction factor. You must also subtract the Slippage Correction Factor. This should then give you an elevation of the sensor orifice relative to the assumed RP elevation.

It is also helpful to tapedown from the housing nut to the ground elevation. This can be used to quickly determine the depth of water that occurred during the storm. It can also help determine any change in beach elevation due to erosion or aggregation of sand with the wave action. Space is provided on the SSS Recovery Inspection Form for this measurement.

If the housing has slipped, measure to the ground surface from both the nail/chiseled mark and the top of the housing nut. Document these measurements on the SSS Recovery Inspection Form appropriately.

8.5 High-Water Marks.—Any high-water marks from the storm surge should be flagged according to established USGS procedures and documented on the recovery inspection forms so that levels can be run at a later time, if necessary.

8.6 Digital Photographs.—Each FRT should be equipped with a digital camera to record the site conditions before and after the storm event. Each brand of camera is different in how it stores each image file, so it is important to record the "owner" of each camera on the bottom of the inspection form. Also on the form are places to circle as to what types of images were taken. It would be helpful if the ability to display the date in the digital image was activated.

The first image at each site during recovery should be a snapshot of a dry erase board that displays the site name, date, and type of sensor. An example of this is shown in Figure 2. Each team should be equipped with a small dry erase board and several dry erase markers. Any other images should be taken to document specific conditions that have been altered relative to the housing deployment and surrounding area caused by the hurricane landfall.

When the digital images are downloaded to a computer and subsequently to a central file location, they should be weeded out for poor quality images and the remaining ones renamed according to the file name nomenclature of:

SSS-ST-COU-###-P#.jpg

where:

SSS	represents "Storm Surge Sensor" project
ST	represents the State where deployed
COU	represents the County where deployed
###	represents the site number assigned by the FRT
P#	represents the numerical order of each image

Note: the site number is not a USGS downstream order number, but a three-digit number assigned by the FRT. Each FRT should have a range of numbers assigned to them at the pre-deployment meeting for all of their sites. It is helpful to assign these numbers in increments of fives.

The numerical order of the recovery images should resume after that particular site's last deployment image.

8.7 Call-In Procedures.—The call-in procedure is a critical tool for organizing the station data as well as track the progress and safety of each FRT. Following the completion of each site recovery, the FRT should call into the CC to check in and provide the following information:

- Site Name
- Site Description
- Latitude/Longitude
- Type of Sensor (surge, wave height, barometric pressure)
- Sensor serial number
- Field crew
- Recovery time
- Other pertinent information (damage to sensor, etc.)

This information is entered into the Site Summary Spreadsheet by the CC which is used to track all site recovery information and inspection forms.

If more than an hour passes between SSS recovery inspections, the FRT should call into the CC to check in for safety purposes. If the CC does not hear from the FRT

within that hour, the CC team should call the FRT either on their cell phones or satellite phones. If persistent contact attempts fail, other FRT teams in the area should be contacted to attempt to locate the missing FRT, starting with their last known call-in location. These frequent call-in procedures should continue until all FRTs have reached the fall-back location. During the call, any change of deployment plans based upon changes of projected storm path should be communicated to each FRT.

The frequency of calls can be relaxed depending upon the severity of the storm.

8.8 Completion of SSS Recovery Effort.—Once each FRT completes the recovery of their assigned sites, they should drive back to the post-recovery location, or to their home office(s), as determined in the pre-recovery meeting. The FRT should notify the CC of their plans following the completion of the last site recovery, as well as call the CC upon arrival to the post-recovery location or home office.

8.9 Surveying Site Elevations.—This can be included as part of the initial recovery effort, or coordinated at a later time with alternate WSC personnel. The SSC coordinator will finalize surveying plans with the OSW representative prior to the beginning of the recovery effort. All surveying practices should follow USGS standards and protocols, where applicable. Differential leveling equipment should be used to complete the site loop between the RPs, RMs, and any available high-water marks. Differential leveling could also be use to tie the loop into a known benchmark if within reasonable distance. If a known benchmark is not readily available, then dGPS surveying equipment should be used. Standard USGS leveling forms should be used. All surveying data forms and data files should be transmitted to the coordinating SSC overnight to facilitate prompt processing of the surge data.

CHAPTER 9: POST-STORM WRAP-UP

There are a few tasks that must be completed before the data management process begins. This enables the equipment that was deployed to be readied again for another storm. If this is neglected, then the SSC will not be ready for a second deployment in time. These tasks include the downloading and shutting down of the sensors, the cleaning of the deployed equipment and housings, and the preparation for the next storm.

9.1 Downloading and Shutting Down the SSSs.—It is important to connect the sensor to the laptop using the USB docking station as soon after the SSS is recovered as possible. This can be accomplished by the passenger of the FRT while driving to the next site location. This is to download the collected data to the laptop for verification of the quality of the data, and to also preserve the battery life of the SSS. Processing of the surge raw data files with the appropriate barometric pressure raw data files can also occur at this time. Initial indications of relative surge height should be relayed to the CC.

The surge raw data file should be named following the standard file naming nomenclature as follows:

SSS-ST-COU-###.hobo

where:

SSS	represents “Storm Surge Sensor” project
ST	represents the State where deployed
COU	represents the County where deployed
###	represents the site number assigned by the FRT

Note: the site number is not a USGS downstream order number, but a three-digit number assigned by the FRT. The .hobo file extension differentiates this file as a raw data file from all other station files.

The barometric pressure raw data file should be named following the standard file naming nomenclature as follows:

SSS-ST-COU-###BP.hobo

where:

SSS	represents “Storm Surge Sensor” project
ST	represents the State where deployed
COU	represents the County where deployed
###	represents the site number assigned by the FRT
BP	represents a barometric pressure data file

Note: the site number is not a USGS downstream order number, but a three-digit number assigned by the FRT. The .hobo file extension and BP in name help to differentiate this file as a raw barometric pressure data file from all other station files.

The subsequent processed data file should be named following the standard file naming nomenclature as follows:

SSS-ST-COU-###.hproj

where:

SSS	represents “Storm Surge Sensor” project
ST	represents the State where deployed
COU	represents the County where deployed
###	represents the site number assigned by the FRT

Note: the site number is not a USGS downstream order number, but a three-digit number assigned by the FRT. The .hproj file extension differentiates this file as a project data file from all other station files.

9.2 Collection of All Equipment, Forms, and Files from FRTs.— It is important that all equipment and SSS Recovery Inspection Forms be collected from the various FRTs. This is especially important if there was no post-recovery location and all FRTs instead traveled back to their home office(s). All SSSs, housings, and original inspection forms should be shipped overnight back to the coordinating SSC office. An inventory of all equipment should be performed to ensure completeness. All digital files should be emailed to the SSC coordinator.

9.3 Cleaning of the Deployed Equipment and Housings.—The SSS and housings that were deployed should be rinsed in fresh or deionized water as soon as possible to prevent rusting or other damage. Once dry, the SSS should be returned to the Pelican cases used for storage and transportation. The housings should also be returned to their storage boxes.

9.4 Preparation for the Next Storm.—A SSC member should verify the equipment in each of the dry boxes and replace any missing tools or equipment as necessary. This should be performed within two weeks of the completion of the recovery effort.

CHAPTER 10: DATA MANAGEMENT

The data management efforts will commence immediately upon recovery of the SSS data. Items that need to be performed include reconciling all data files with the Site Summary Spreadsheet, the verification of site datums, and the processing and quality-assurance of surge and barometric pressure data. Other longer-term data management issues involve the creation of a repository for the data files, and historical archival of the data in the USGS NWIS database.

10.1 Reconciling Data Files with Site Summary Spreadsheet.—The Site Summary Spreadsheet is used to record the file names of the raw and processed data files from each station. These entries should be verified by the SSC with the individual data files to ensure that all data are accounted for.

10.2 Verification of Site Datums.—The surveying forms and data files should be analyzed and reviewed by the SSC for potential errors. If critical errors are found, the SSC coordinator should request a re-run of levels by available surveying crews.

10.3 Processing and Quality-Assurance of SSS data files.—The SSC will perform the final data processing and quality-assurance of the SSS data files. Comparison of SSS with USGS real-time stations, redundant SSS deployments, and other agencies' data, such as NOAA data, should be used to help quality-assure the SSS data files. Once the quality-assurance is completed, a final processed data file, in CSV format, should be created for each site. The subsequent final data file should be named following the standard file naming nomenclature as follows:

SSS-ST-COU-###-final.csv

where:

SSS	represents “Storm Surge Sensor” project
ST	represents the State where deployed
COU	represents the County where deployed
###	represents the site number assigned by the FRT

Note: the site number is not a USGS downstream order number, but a three-digit number assigned by the FRT. The .csv file extension differentiates this file as a raw data file from all other station files.

There is often interest in having access to the raw data files as well. The raw surge data file should be named following the standard file naming nomenclature as follows:

SSS-ST-COU-###.csv

where:

SSS	represents “Storm Surge Sensor” project
ST	represents the State where deployed
COU	represents the County where deployed
###	represents the site number assigned by the FRT

Note: the site number is not a USGS downstream order number, but a three-digit number assigned by the FRT. The .csv file extension differentiates this file as a raw data file from all other station files.

The raw barometric pressure data files should be named following the standard file naming nomenclature as follows:

SSS-ST-COU-###BP.csv

where:

SSS	represents “Storm Surge Sensor” project
ST	represents the State where deployed
COU	represents the County where deployed
###	represents the site number assigned by the FRT
BP	represents a barometric pressure data file

Note: the site number is not a USGS downstream order number, but a three-digit number assigned by the FRT. The .csv file extension and the BP in the file name help to differentiate this file as a raw barometric pressure data file from all other station files.

10.4 Creation of Temporary Data File Repository.—To speed the provision of raw and processed data to USGS researchers, other Federal agencies, and emergency management officials, FTP sites or databases with website portals may be used even as data reports and other official outlet mechanisms are being prepared and submitted

for Director's approval. In time, and as experience with data processing is gained, the program will publish a quality-assurance plan through which the data will be released in a "near-real time process".

10.5 Archival of Data in NWIS.—Following the USGS mission, the data should be permanently archived in the local WSC National Water Information System (NWIS) database. If a downstream order station number cannot be assigned, then a 15-digit latitude/longitude station number should be used. The data interval limitation for NWIS is 30-seconds, which matches the preferred data interval of the SSS project. Data descriptors for both the raw and processed data should be created for permanent storage of both sets of data.

CHAPTER 11: DATA PRESENTATION

Various presentation techniques will be used to disseminate the collected data and the subsequent analyses of those data, including web pages, fact sheets, and reports.

Data will be disseminated as soon as possible from the Ruston, LA SSC via a web page displayed using NatWeb. The web page will show the study area map displaying the deployment site locations with the associated site names. Graphs of storm surge and barometric pressure data from the SSS's will be displayed by site. Raw data files will be available for download from this site and the associated data (water density, BPS site, etc.) used to process the SSSs.

As conditions warrant fact sheets summarizing the SSS deployment/recovery and data reports will be coauthored by WSCs, SSCs, and OSW, utilizing program funds. Individual WSCs may create products of their own and are encouraged to work with cooperators to formulate interpretive projects.

APPENDIX A: STORM SURGE CENTER (SSC) COORDINATORS

These are persons that are familiar with the scope of the project and are able to participate in the strategic planning and coordination efforts of the Storm Surge Sensor (SSS) network project.

USGS HQ Project Oversight					
Name		*Office Phone*	*Email*	*Cell Phone*	*Home Phone*
Robert Mason	OSW	703.648.5305	rrmason@usgs.gov		
Atlanta, Georgia SSC					
Name		*Office Phone*	*Email*	*Cell Phone*	*Home Phone*
Brian McCallum	Primary	770.903.9127	bemccall@usgs.gov	404.375.2505	678.442.6722
Andy Knaak	Alternate	770.903.9188	aknaak@usgs.gov	678.410.6913	404.394.1302
Chris Smith	Alternate	770.903.9115	smithca@usgs.gov	912.657.4047	770.904.4146
Orlando, Florida SSC					
Name		*Office Phone*	*Email*	*Cell Phone*	*Home Phone*
Leroy Pearman	Primary	407.803.5577	jpearman@usgs.gov		
Ruston, Louisiana SSC					
Name		*Office Phone*	*Email*	*Cell Phone*	*Home Phone*
Ben McGee	Primary	318.251.9630 x 19	bdmcgee@usgs.gov	318.224.0768	318.255.9104
Burl Goree	Alternate	318.251.9630 x 12	bbgoree@usgs.gov	318.224.0847	318.255.5359

APPENDIX B: SSC COMMUNICATIONS CENTER TEAM MEMBERS

These are persons that have designated in each SSC to be a part of a SSC Communications Center to facilitate communications between FRTs, SSCs, and WSCs.

Atlanta, Georgia SSC					
Name		*Office Phone*	*Email*	*Cell Phone*	*Home Phone*
Brian Hughes		770.903.9162	wbhughes@usgs.gov	404.277.6934	770.979.2655
Mark Landers		770.903.9152	landers@usgs.gov	404.625.6106	770.338.1042
Suzie Grams		770.903.9128	scgrams@usgs.gov	404.403.3044	770.205.5025
Tony Gotvald		770.903.9310	agotvald@usgs.gov	404.219.8852	770.978.1110
Paul Ankcorn		770.903.9305	pankcorn@usgs.gov	678.618.9430	770.339.4411
Andy Hickey		770.903.9157	achickey@usgs.gov	404.219.8845	770.978.6814
John Joiner		770.903.9182	jkjoiner@usgs.gov	678.618.0006	770.979.1753
Orlando, Florida SSC					
Name		*Office Phone*	*Email*	*Cell Phone*	*Home Phone*
Ruston, Louisiana SSC					
Name		*Office Phone*	*Email*	*Cell Phone*	*Home Phone*
Aub Ward		318.251.9630	anward@usgs.gov	318.548.1637	318.254.0072
Craig Waters		318.251.9630	jcwaters@usgs.gov	318.245.1541	318.259.9630
David Sasser		318.251.9630	dsasser@usgs.gov	318.245.0745	318.768.4357

APPENDIX C: SSC FIELD RESPONSE TEAM (FRT) LEADERS

These are persons that have been trained on the techniques outlined in this Operations Plan and have the equipment and ability to lead a FRT in a deployment effort.

Atlanta, Georgia SSC					
Name		*Office Phone*	*Email*	*Cell Phone*	*Home Phone*
Andy Knaak		770.903.9188	aknaak@usgs.gov	678.410.6913	404.394.1302
Chris Smith		770.903.9115	smithca@usgs.gov	912.657.4047	770.904.4146
Mark Reynolds		229.430.8420	msreynol@usgs.gov	229.878.9334	229.698.2155
Greg Donley		229.382.6353	gbdonley@usgs.gov	229.392.7506	229.248.6509
Brian McCallum		770.903.9127	bemccall@usgs.gov	404.375.2505	678.442.6722
GA sat phone 1		480.768.2500			
GA sat phone 2		TBD			
Orlando, Florida SSC					
Name		*Office Phone*	*Email*	*Cell Phone*	*Home Phone*
Leroy Pearman		407.803.5577	jpearman@usgs.gov		
Ruston, Louisiana SSC					
Name		*Office Phone*	*Email*	*Cell Phone*	*Home Phone*
Ben McGee		318.251.9630	bdmcgee@usgs.gov	318.224.0768	318.255.9104
Burl Goree		318.251.9630	bbgoree@usgs.gov	318.224.0847	318.255.5359
LA sat phone 1		863.833.0718			
LA sat phone 2		254.543.4162			

APPENDIX D: EQUIPMENT AND SUPPLIES

VEHICLE

- 4WD truck, with lockable storage bins and center bay, trailer hitch, and boat rack
- Auxiliary fuel tanks
- Boat with trailer, appropriate for the size of channels to be used in (specific to WSCs needs)
- Jon-boat, on boat rack, with small outboard motor
- Gas cards for vehicle and boats

COMMUNICATIONS

- Satellite phone (in Pelican case)
- Cell phone
- FRT contact list
- CC contact list
- WSC POC contact list
- State Police contact list
- Letter from State Police for post-storm access
- Government calling card
- USGS phone directory

NAVIGATION TOOLS

- Road maps
- DeLorme Atlas computer software
- Gazetteers for Gulf and Atlantic regions
- Garmin hand-held GPS units with software for laptops (in Pelican case)
- Pre-selected site map(s)—*if available*

FOOD SUPPLIES

- Cases of water bottles or Gatorade
- Non-spoiling food
- Ice

DATA COLLECTION

- Pressure sensors (HOBOs/In-Situ's) in Pelican cases (20 each)
- Pressure sensor housings
- Ratchet straps (1 per housing) plus spares
- Field inspection forms
- PDA
- Laptop with all appropriate software pre-loaded and sensor connections
- Digital camera with extra storage disks/cards
- UCT watches
- ADCP with tethered boat

APPENDIX D: EQUIPMENT AND SUPPLIES (cont.)

PERSONAL GEAR
- Rain gear
- Waders
- Hip boots
- PFDs
- Orange USGS field shirts and hats
- Work gloves
- Chaps, face shield—*for when using chainsaw*
- Sunglasses
- Sunscreen
- Bug spray
- Government credit card
- Travel authorization
- Tax-exempt forms

GENERAL SUPPLIES
- Marine storage boxes for miscellaneous supplies
- Halogen hand-held spotlight
- Flashlight
- Spare batteries
- Power inverter
- Multi-port power port (for vehicle cigarette lighter)
- First aid kit
- Boxes of Chemwipes or paper towels
- Extension cords
- Sleeping bags
- Tents
- Cooking gear
- Coolers
- Spray paint
- Clipboards
- Small dry erase boards and markers (for digital image site names)

POWER TOOLS
- Small generator
- Chain saw
- Extension tree saw

HAND TOOLS
- Hammers
- Chisels
- Tree saw
- Tape measure
- Machete

APPENDIX D: EQUIPMENT AND SUPPLIES (cont.)

SURVEYING EQUIPMENT

- dGPS surveying equipment—*if available*
- Digital level with tripod
- Digital level surveying rods
- Surveying rod levels
- USGS surveying forms
- Flagging
- USGS high-water markers
- Keel
- Nails
- Railroad spikes or similar (for RMs)
- Steel tape w/ weight
- 4-foot construction level
- Hand-held level
- Folding ruler

APPENDIX E: CONSTRUCTION INSTRUCTIONS FOR A SSS HOUSING.

1) Tools needed for construction: metal chop saw, pipe-threading machine (Threaded pipe of various sizes and diameters may be available from a hardware store), bench grinder, drill press, arc welder, and basic hand tools.

2) Using a metal-chop saw, cut one each of the following: 1 ¼" x 10" steel pipe, 2" x 8" angle iron, 2" x 1" channel iron.

3) Using the drill press, drill two holes into the top of the 1 ¼" cap. One in the center to receive the eye bolt and another to one side to act as a vent hole. The holes can be the same size.

4) Thread one of the nuts as far as it will go onto the eye bolt. Place the eye bolt through the cap (from the bottom) and put the lock washer and remaining nut on the eye bolt and wrench tight. Now, cut the remaining portion of the eye bolt off and grind the remainder even with the top of the nut. The idea here is to make the distance from the top of the nut to the bottom of the eye bolt a consistent length- this will aid in the elevation survey of the sensor.

5) Using the metal-chop saw, cut the 1 ¼" steel pipe to a 10" length and thread one end to receive the cap. Leave the other end of the steel pipe unthreaded and open.

6) Weld the 2" x 8" angle iron onto the side of the pipe. Make two welds (top and bottom) on each side of the pipe (four welds total). Be sure not to cover any of the threaded portion of the pipe with the angle iron.

7) Center the channel iron onto the angle iron and weld at the top and on the bottom. The ratchet strap will be threaded through this opening to secure the strap to the housing.

8) Attach the removable d-link to the eye bolt. This will receive the key ring (attached to the storm-surge sensor) to attach the storm-surge sensors.

Important- all of the caps, eye bolts, lock washers, nuts, d-links, and key rings used for the housings should be a consistent size (e.g. all of the eye bolts should be the same size).

APPENDIX F: SSS DEPLOYMENT INSPECTION FORM

DRAFT—ADMINISTRATIVE USE ONLY

DEPLOYMENT

(one form per housing)

STORM SURGE SENSOR INSPECTION FORM

_____

Quick Lookup #

DATE: _____ **STORM**: _____ **INSPECTORS**: _____

SITE INFORMATION

SITE NAME: _____ **LATITUDE** (DD to 6 places): _____

(Site Name Format: SSS-SS-COU-###, where SS = state, COU = county, ### = site number)

SITE DESCRIPTION: _____ **LONGITUDE** (DD to 6 places):_____

STATE: _____ **COUNTY**:_____ **Landowner notified** (circle one): Yes No

SENSOR INFORMATION

Sensor Type (circle one): *HOBO* *TROLL* Sensor Serial Number: _____

Deployed As (circle one): *water level* *barometric pressure* *wave height*

Deployment Time (UCT): _____ Tapedown or Tapeup from Housing Nut:_____ feet

Sensor Data Interval (circle one): *30 sec* *2 sec* Housing Correction Factor: _____ feet (nut to orifice

Sensor Logging Start Time (UCT) _____ **Sensor in Water** (circle one): *YES* *NO*

REFERENCE POINT INFORMATION

RP # ____ Assumed RP elev. = _____ feet

TD from RP = _____ feet

Weight length= _____ feet

Subtract total tapedown _____ feet

Assumed WS elevation = _____ feet

Add/Subtract Housing TD/TU = _____ feet

Housing Correction Factor = _____ feet

Sensor Orifice Elevation = _____ feet

TD to channel bottom/beach = _____ feet

RP description: _____

_____

_____

Other notes: _____

_____

SITE SKETCH

_____ VI label on housing? _____

Images **Taken** (circle all that apply): *Sensor* *Upstream* *Downstream* *Other* **Camera Owner**: _____

Barometric Pressure (BP) at same Site?(circle one): Yes No **Reference BP Site Name:** _____

Departure Time: _____ **Called In at Time**: _____ **Call-in Contact Initials:** _____

Please ensure original inspection sheet is given to SSC team member upon return from field.

APPENDIX G: EXAMPLE OF SITE SUMMARY SPREADSHEET

Tropical Storm Ernesto SSS site deployments

South Carolina

August 30-September 1, 2006

Quick Lookup Number	Site Name	Site Description	Lat	Long	County	Unit	Serial Number	Crew	Type
SC2	SSS-SC-BEA-3	Broad River at SR 170	32 23 26	80 46 38	Beaufort	HOBO	128788	Kaiser/Roberts	storm surge
SC2b	SSS-SC-BEA-3	Broad River at SR 170	32 23 26	80 46 38	Beaufort	HOBO	128787	Kaiser/Roberts	barometric pressure
SC3	SSS-SC-BEA-1	Okatee River at SR 278	32 17 21	80 55 43	Beaufort	HOBO	128805	Kaiser/Roberts	storm surge
SC4	SSS-SC-BEA-2	Mackays Creek at SR 278 at Hilton Head	32 13 44	80 47 18	Beaufort	HOBO	128799	Kaiser/Roberts	storm surge
SC5	SSS-SC-BEA-5	Hunting Island at SR 21 (Harbor River Bridge)	32 23 26	80 26 18	Beaufort	HOBO	128785	Kaiser/Roberts	storm surge
SC6	SSS-SC-BEA-6	Hunting Island at SR 21 (Johnson Creek Bridge)	32 24 12	80 27 01	Beaufort	HOBO	1028584	Kaiser/Roberts	storm surge
SC6b	SSS-SC-BEA-6	Hunting Island at SR 21 (Johnson Creek Bridge)	32 24 12	80 27 01	Beaufort	HOBO	1028582	Kaiser/Roberts	barometric pressure
SC7	SSS-SC-BEA-4	Fripp Inlet at Hunting Island State Park boat ramp	32 20 46	80 28 10	Beaufort	HOBO	128811	Kaiser/Roberts	storm surge/wave
SC8	SSS-SC-COL-2	Edisto River at SR 17 in Jacksonboro	32 45 52	80 26 47	Colleton	HOBO	128777	Kaiser/Roberts	storm surge
SC9	SSS-SC-COL-1	Ashepoo River at SR 17	32 44 37	80 33 22	Colleton	HOBO	128802	Kaiser/Roberts	storm surge
SC10	SSS-SC-COL-3	Combahee River at 17	32 39 08	80 41 00	Colleton	HOBO	128812	Kaiser/Roberts	storm surge
SC31	02110850	Waccamaw River at SR 17, at Georgetown, SC	33 22 02	79 15 18	Georgetown	RT-radar	N/A	Conrads/Hall	storm surge
SC11	SSS-SC-COL-4	Atlantic Ocean at Edisto Beach Pier	32 30 10	80 17 49	Colleton	Troll	107969	Conrads/Hall	storm surge/wave
SC11b	SSS-SC-COL-4	Atlantic Ocean at Edisto Beach Pier	32 30 10	80 17 49	Colleton	HOBO	1017588	Conrads/Hall	barometric pressure
SC12	3238150802400	Dawho River near Adams Run, SC	32 38 15	80 20 24	Charleston	RT-radar sensor	N/A	Conrads/Hall	storm surge

APPENDIX H: SSS RECOVERY INSPECTION FORM

RECOVERY

(one form per housing)

STORM SURGE SENSOR INSPECTION FORM

_____
Quick Lookup #

DATE: _____ **STORM**: _____ **INSPECTORS**: _____

SITE INFORMATION

SITE NAME: _____ **LATITUDE** (DD to 6 places): _____

(Site Name Format: SSS-SS-COU-###, where SS = state, COU = county, ### = site number)

SITE DESCRIPTION: _____ **LONGITUDE** (DD to 6 places): _____

SENSOR INFORMATION

Sensor Type (circle one): *HOBO* *TROLL* **Sensor Serial Number:** _____

Recovery Time (UCT): _____ **Tapedown or Tapeup from Housing Nut**:_____ feet

Sensor in Water (circle one): *YES* *NO* **Housing Correction Factor:** _____ feet (nut to orifice)

Slippage during deploy? (circle one): *YES* *NO* **Slippage distance:** _____ feet (nut to ref. mark)

REFERENCE POINT INFORMATION

RP # ____ Assumed RP elev. = _____ feet
TD from RP = _____ feet
Weight length= _____ feet
Subtract total tapedown _____ feet

Assumed WS elevation = _____ feet

Add/Subtract Housing TD/TU = _____ feet

Housing Correction Factor = _____ feet

Slipping Correction Factor = _____ feet

Sensor Orifice Elevation = _____ feet

TD to channel bottom/beach = _____ feet

SITE SKETCH (if needed)

High-Water Marks (circle one): *YES* *NO*

Other notes: _____

_____

_____

HWM description: _____

_____

_____

Images Taken (circle all that apply): *Sensor* *Upstream* *Downstream* *Other* **Camera Owner**: _____

Barometric Pressure (BP) at same Site?(circle one): Yes No **Reference BP Site Name:** _____

Departure Time: _____ **Called In at Time**: _____ **Call-in Contact Initials:** _____

PROCESSING INFORMATION (To be completed by Data Processor)

Raw surge data filename: _____ **Reference BP raw data filename**: _____
(filename format: SSS-SS-COU-###.hobo) (filename format: SSS-SS-COU-###BP.hobo)

Proc'd surge data filename: _____ **PDF graph filename**: _____
(filename format: SSS-SS-COU-###-final.csv) (filename format: SSS-SS-COU-###-graph.pdf)

Copied to FTP location (circle one): YES NO **Completion Date:** _____ **Processor Initials:** _____